GUHRING

ISSUE 2010

HT 800 WP

The interchangeable insert drilling system

- **for extreme process reliability**
- **from hole diameter 11 to 25.5 mm**
- **for drilling depths 1.5xD, 3xD, 5xD, 7xD and 10xD**
- **with interchangeable inserts for steel, cast iron and Al**
- **holders/interchangeable inserts for pilot drilling/countersinking**

guhring@guhring-tools.ru
www.guhring-tools.ru

HT 800 WP and power engineering

The ideal drilling system for the production of large, highly-accurate holes in a variety of materials for wind and water power stations, engine plants or gas/steam turbines

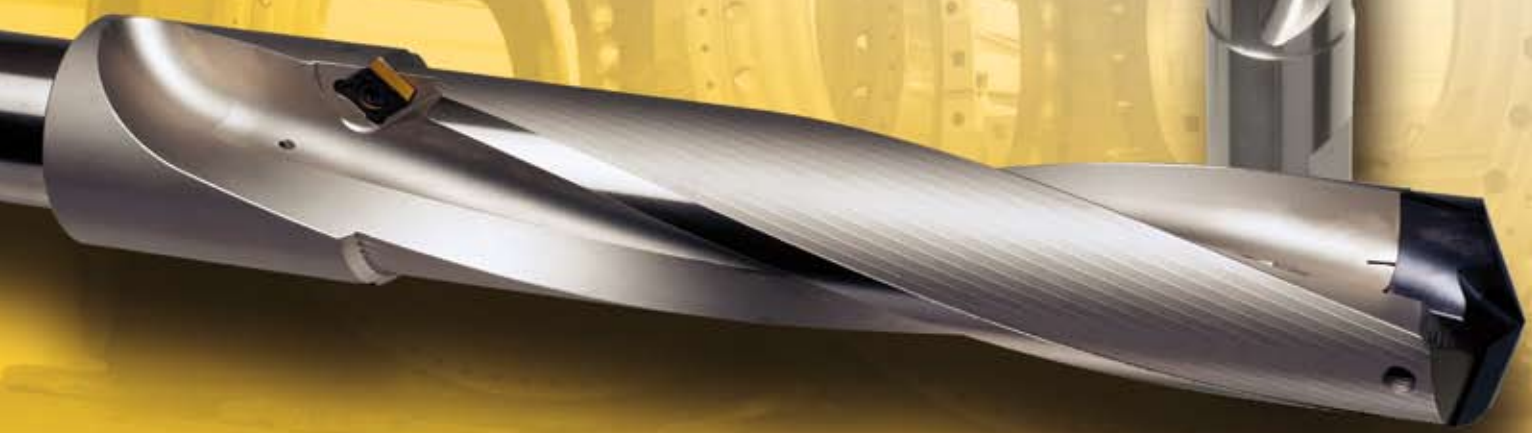

guhring@guhring-tools.ru
www.guhring-tools.ru

HT 800 WP - Technology and Advantages

With the new HT 800 WP interchangeable drilling system Guhring provides high-performance and cost-efficient holders for holes in the diameter range from 11.00 to 25.5 mm that excell thanks to the following advantages:

A Extended tool life

Thanks to special, micro-machined cutting edges and the application oriented surface finish the interchangeable inserts of the HT 800 WP drilling system are especially wear resistant.
The holders of the HT 800 WP drilling system also possess a very high wear resistance. This is based on the optimised holder material with nickel plated surface as well as incremental holder sizes in steps of 0.5 mm. This leads to less wear on the holder body.

B Optimised chip flow

Thanks to their flute cross section the holders of the HT 800 WP drilling system ensure optimal chip evacuation from the hole even with larger drilling depths.

C Perfect cooling lubrication

A perfect cooling lubrication is ensured by coolant ducts with maximum cross section, exiting in the flute. Thereby enabling an optimal cooling lubrication of the cutting edges and additionally support the chip evacuation from the hole.

D Highly accurate and rigid insert seat

The accurate insert seat enables the insert change in the machine in only a few, simple steps with a standard Torx screw driver. Thanks to the optimised material for the holders of the HT 800 WP drilling system, the insert can be changed more frequently than with conventional systems before the holder needs to be replaced due to wear of the insert seat.
The clamping screws with screw lock ensure a secure holding of the interchangeable insert in the holder even with machines subject to high levels of vibrations.

Rigid holders

The close stepped diameter jumps of 0.5 mm with the holder sizes not only reduce wear. Through the better guidance of the tool in the hole they also increase the rigidity of the HT 800 WP drilling system. Subsequently, resulting in longer tool life as well as improved workpiece surfaces.

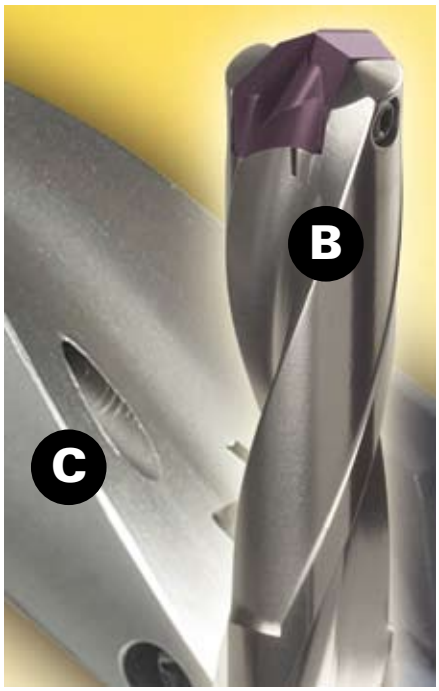

HT 800 WP - Application Tips

Please observe the following notes and recommendations for the application of Guhring's HT 800 WP tools:

We recommend when changing the insert to also replace the clamping screw!
Therefore, every holder is supplied with a clamping screw, Guhring no. 4071, and screwdriver, Guhring no. 1612. Every interchangeable insert is also supplied with a clamping screw, Guhring no. 4071.

When changing the insert please observe the following tightening torques for the clamping screw. Adhering to them is absolutely necessary for optimal machining results!

Diameter range	11.0 - 12.99	13.0 - 13.99	14.0 - 15.99	16.0 - 17.99	18.0 - 19.99	20.0 - 21.99	22.0 - 25.99
Thread	M2.2	M2.5	M3	M3.5	M4	M4.5	M5
Torx size	T7	T8	T9	T10	T15	T15	T20
Tightening torque[Ncm]	**80**	**100**	**170**	**270**	**400**	**580**	**810**

Details apply to thread locking (Loctite)!

Selected machining results

Guhring no.	4107 + 4112	4109 + 4112	4109 + 4112	4107 + 4113	4108 + 4113
Diameter	17.5	17.5	17.5	17.5	14.1
Coating	nanoFIRE	nanoFIRE	nanoFIRE	FIRE	FIRE
Material group	alloyed heat-treatable steel	alloyed heat-treatable steel	general structural steels	cast iron	cast iron
Material description	42CrMo4/ 1.7275	42CrMo4/ 1.7275	St52-3/ 1.0570	GG25/ 0.6025	GGG40/ 0.7040
Drill. depth [mm]	50	122,5	122,5	50	70
Hole type	blind hole	blind hole	blind hole	blind hole	blind hole
Cooling	IC 40 bar	IC 40 bar	IC 40 bar	IC 40 bar	IC 55 bar
Coolant	soluble oil	soluble oil	soluble oil	soluble oil	soluble oil
Machine type	machining centre	machining centre	machining centre	machining centre	machining centre
v_c [mm/min]	100	85	130	80	160
f_z [mm]	0,28	0,25	0,15	0,30	0,60
Tool life [m]	**50**	**30**	**35**	**250**	**120**

HT 800 WP Interchangeable Inserts

HT 800 WP interchangeable inserts are in respect of tool material, geometry and surface finish perfectly adapted to your specific range of application. Subsequently, you will always achieve optimal machining results with maximum performance and highest economic efficiency.
The insert change with HT 800 WP can be performed in the machine problem-free, the interchangeable insert always sits perfectly clamped and positioned in the holder.

Technical features and application recommendations

Guhring no.	4112	4113	4114	4111
Tool material	solid carbide	solid carbide	solid carbide	solid carbide
Surface	nanoFIRE	FIRE	bright	nanoA
Point geometry	2-facet	2-facet	relieved cone	relieved cone
Point angle	140°	140°	140°	150°
Tolerance	h7	m7	h7	m7
Diameter	11.0 - 25.5	11.0 - 25.5	11.0 - 25.5	11.0 - 25.5
Application	**steel**	**cast iron**	**aluminium**	**pilot drilling**
				

● optimal suitability
○ limited suitability

Application group	Material examples	4112	4113	4114	4111
P	steel, cast steel, stainless steel (ferritic and martensitic)	●	○		○
M	stainless steel and cast steel (austenitic and austenitic/ferritic)	○			○
K	grey cast iron, spheroidal graphite und malleable cast iron	○	●		○
N	aluminium and other non-ferrous metals			●	○
S	Special, Super- and Ti-alloys				
H	Hardened steels and chilled cast iron				

Complete compatibility

The new interchangeable inserts as well as the new holders of the HT 800 WP system are fully compatible with the conventional HT 800 WP interchangeable inserts and holders. You can, therefore, apply the new interchangeable inserts in the already existing HT 800 WP holders or combine new holders with existing interchangeable inserts. Drilling tests with both combination possibilities have shown that the efficiency of each package lies above the values of the old HT 800 WP system. You will definitely benefit!
The pilot insert 4111 can be combined with any holder, if the application requires a 150° point angle.

Guhring no.	7645	7632	7635
Tool material	solid carbide	solid carbide	solid carbide
Surface	TiN	TiAlN	bright
Type	CPGT ... R	CPGW ... R	CPGT ... R
Application	**steel**	**cast iron**	**aluminium**
			

● optimal suitability
○ limited suitability

Application group	Material examples	7645	7632	7635
P	steel, cast steel, stainless steel (ferritic and martensitic)	●	○	
M	stainless steel and cast steel (austenitic and austenitic/ferritic)	○		
K	grey cast iron, spheroidal graphite und malleable cast iron	○	●	
N	aluminium and other non-ferrous metals			●
S	Special, Super- and Ti-alloys			
H	Hardened steels and chilled cast iron			

guhring@guhring-tools.ru
www.guhring-tools.ru

HT 800 WP Interchangeable Insert Holders

HT 800 WP holders offer highest accuracy and rigidity. The open flute together with internal cooling guarantees an optimal chip evacuation particularly from deeper holes. The reinforced shank to DIN 6535 HE ensures the strong and accurate clamping of the holder in the tool holder. As it meets the DIN standard for solid carbide monoblock tools, a problem-free changeover to the HT 800 WP system in production is possible at any time.

Guhring no.	**4105**	**4106**	**4107**	**4108**	**4109**	**4110**
Drilling depth	1 x D	1.5 x D	3 x D	5 x D	7 x D	10 x D
Diameter	11.0 - 25.99	11.0 - 25.99	11.0 - 25.99	11.0 - 25.99	11.0 - 25.99	11.0 - 25.99
Shank	DIN 6535-HE	DIN 6535-HE	DIN 6535-HE	DIN 6535-HE	DIN 6535-HE	DIN 6535-HE
	45° pilot drilling/ countersinking					

Special tools

In addition to our HT 800 WP standard tools we also supply HT 800 WP stepped tools as well as alternative coatings for HT 800 WP interchangeable inserts as special solutions. Special sizes up to ø 40.00 mm are available on request. Please note our questionnaire on page 39.

HT 800 WP Interchangeable Inserts For Machining Steel

Order no. = Guhring no. + Code-no.

Guhring no	4112
DIN	Guhring std.
Tool material	Solid carbide
P	●
M	○
K	○
N	
S	
H	
Surface f nish	nanoFIRE
Discount group	141

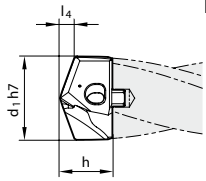

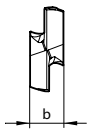

Code no.	Holder size	d1 h7 inch	d1 h7 mm	l4 mm	b mm	h mm	Availability
11.000	110		11.00	2.1	4.5	7.5	●
11.200	110		11.20	2.1	4.5	7.5	●
11.500	115		11.50	2.1	4.5	7.5	●
11.510	115	29/64	11.51	2.1	4.5	7.5	●
11.700	115		11.70	2.1	4.5	7.5	●
11.800	115		11.80	2.1	4.5	7.5	●
11.910	115	15/32	11.91	2.2	4.5	7.5	●
12.000	120		12.00	2.2	5.0	7.8	●
12.100	120		12.10	2.2	5.0	7.8	●
12.200	120		12.20	2.2	5.0	7.8	●
12.300	120	31/64	12.30	2.2	5.0	7.8	●
12.500	125		12.50	2.3	5.0	7.8	●
12.600	125		12.60	2.3	5.0	7.8	●
12.700	125	1/2	12.70	2.3	5.0	7.8	●
12.800	125		12.80	2.3	5.0	7.8	●
12.900	125		12.90	2.3	5.0	7.8	●
13.000	130		13.00	2.4	5.5	8.6	●
13.100	130	33/64	13.10	2.4	5.5	8.6	●
13.490	130	17/32	13.49	2.4	5.5	8.6	●
13.500	135		13.50	2.4	5.5	8.6	●
13.600	135		13.60	2.4	5.5	8.6	●
13.700	135		13.70	2.4	5.5	8.6	●
13.800	135		13.80	2.5	5.5	8.6	●
13.890	135	35/64	13.89	2.5	5.5	8.6	●
14.000	140		14.00	2.5	6.0	9.7	●
14.100	140		14.10	2.5	6.0	9.7	●
14.290	140	9/16	14.29	2.6	6.0	9.7	●
14.400	140		14.40	2.6	6.0	9.7	●
14.500	145		14.50	2.6	6.0	9.7	●
14.600	145		14.60	2.7	6.0	9.7	●
14.680	145	37/64	14.68	2.7	6.0	9.7	●
14.700	145		14.70	2.7	6.0	9.7	●
14.800	145		14.80	2.7	6.0	9.7	●
15.000	150		15.00	2.7	6.0	9.9	●
15.080	150	19/32	15.08	2.7	6.0	9.9	●
15.100	150		15.10	2.7	6.0	9.9	●
15.200	150		15.20	2.8	6.0	9.9	●
15.300	150		15.30	2.8	6.0	9.9	●
15.480	150	39/64	15.48	2.8	6.0	9.9	●
15.500	155		15.50	2.8	6.0	9.9	●
15.600	155		15.60	2.9	6.0	9.9	●
15.700	155		15.70	2.9	6.0	9.9	●
15.800	155		15.80	2.9	6.0	9.9	●
15.870	155	5/8	15.87	2.9	6.0	9.9	●
16.000	160		16.00	2.9	7.0	11.1	●
16.270	160	41/64	16.27	3.0	7.0	11.1	●
16.500	165		16.50	3.0	7.0	11.1	●
16.670	165	21/32	16.67	3.0	7.0	11.1	●
17.000	170		17.00	3.1	7.0	11.1	●
17.070	170	43/64	17.07	3.1	7.0	11.1	●
17.460	170	11/16	17.46	3.1	7.0	11.1	●
17.500	175		17.50	3.2	7.0	11.1	●
17.600	175		17.60	3.2	7.0	11.1	●
17.860	175	45/64	17.86	3.3	7.0	11.1	●

Order no. = Guhring no. + Code-no.

Guhring no	4112
DIN	Guhring std.
Tool material	Solid carbide
P	●
M	○
K	○
N	
S	
H	
Surface f nish	nanoFIRE
Discount group	141

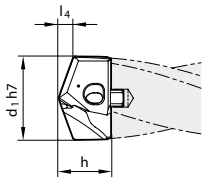

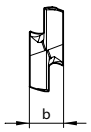

Code no.	Holder size	d1 h7 inch	d1 h7 mm	l4 mm	b mm	h mm	Availability
18.000	180		18.00	3.3	8.0	12.5	●
18.260	180	23/32	18.26	3.3	8.0	12.5	●
18.500	185		18.50	3.4	8.0	12.5	●
18.650	185	47/64	18.65	3.4	8.0	12.5	●
19.000	190		19.00	3.5	8.0	12.5	●
19.050	190	3/4	19.05	3.5	8.0	12.5	●
19.450	190	49/64	19.45	3.5	8.0	12.5	●
19.500	195		19.50	3.5	8.0	12.5	●
19.600	195		19.60	3.6	8.0	12.5	●
19.840	195	25/32	19.84	3.6	8.0	12.5	●
20.000	200		20.00	3.6	9.0	13.8	●
20.240	200	51/64	20.24	3.6	9.0	13.8	●
20.500	205		20.50	3.7	9.0	13.8	●
20.640	205	13/16	20.64	3.8	9.0	13.8	●
21.000	210		21.00	3.8	9.0	13.8	●
21.030	210	53/64	21.03	3.8	9.0	13.8	●
21.100	210		21.10	3.9	9.0	13.8	●
21.430	210	27/32	21.43	3.9	9.0	13.8	●
21.500	215		21.50	3.9	9.0	13.8	●
21.830	215	55/64	21.83	4.0	9.0	13.8	●
22.000	220		22.00	4.0	10.0	15.2	●
22.220	220	7/8	22.22	4.0	10.0	15.2	●
22.500	225		22.50	4.1	10.0	15.2	●
22.620	225	57/64	22.62	4.1	10.0	15.2	●
23.000	230		23.00	4.2	10.0	15.2	●
23.020	230	29/32	23.02	4.2	10.0	15.2	●
23.420	230	59/64	23.42	4.3	10.0	15.2	●
23.500	235		23.50	4.3	10.0	15.2	●
23.810	235	15/16	23.81	4.3	10.0	15.2	●
24.000	240		24.00	4.4	11.0	15.7	●
24.100	240		24.10	4.4	11.0	15.7	●
24.210	240	61/64	24.21	4.4	11.0	15.7	●
24.500	245		24.50	4.5	11.0	15.7	●
24.610	245	31/32	24.61	4.5	11.0	15.7	●
25.000	250		25.00	4.5	11.0	15.7	●
25.400	250	1	25.40	4.6	11.0	15.7	●
25.500	255		25.50	4.6	11.0	15.7	●

Inserts are always supplied with clamping screw, Guhring no. 4071.

HT 800 WP Interchangeable Inserts For Machining Cast Iron

Order no. = Guhring no. + Code-no.

Guhring no	4113
DIN	Guhring std.
Tool material	Solid carbide
P	○
M	
K	●
N	
S	
H	
Surface f nish	FIRE
Discount group	141

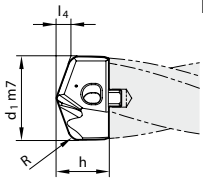

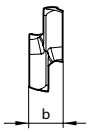

Code no.	Holder size	d1 m7 inch	d1 m7 mm	l4 mm	b mm	h mm	Availability
11.000	110		11.00	2.1	4.5	7.5	●
11.200	110		11.20	2.1	4.5	7.5	●
11.500	115		11.50	2.1	4.5	7.5	●
11.510	115	29/64	11.51	2.1	4.5	7.5	●
11.700	115		11.70	2.1	4.5	7.5	●
11.800	115		11.80	2.1	4.5	7.5	●
11.910	115	15/32	11.91	2.2	4.5	7.5	●
12.000	120		12.00	2.2	5.0	7.8	●
12.100	120		12.10	2.2	5.0	7.8	●
12.200	120		12.20	2.2	5.0	7.8	●
12.300	120	31/64	12.30	2.2	5.0	7.8	●
12.500	125		12.50	2.3	5.0	7.8	●
12.600	125		12.60	2.3	5.0	7.8	●
12.700	125	1/2	12.70	2.3	5.0	7.8	●
12.800	125		12.80	2.3	5.0	7.8	●
12.900	125		12.90	2.3	5.0	7.8	●
13.000	130		13.00	2.4	5.5	8.6	●
13.100	130	33/64	13.10	2.4	5.5	8.6	●
13.490	130	17/32	13.49	2.4	5.5	8.6	●
13.500	135		13.50	2.4	5.5	8.6	●
13.600	135		13.60	2.4	5.5	8.6	●
13.700	135		13.70	2.4	5.5	8.6	●
13.800	135		13.80	2.5	5.5	8.6	●
13.890	135	35/64	13.89	2.5	5.5	8.6	●
14.000	140		14.00	2.5	6.0	9.7	●
14.100	140		14.10	2.5	6.0	9.7	●
14.290	140	9/16	14.29	2.6	6.0	9.7	●
14.400	140		14.40	2.6	6.0	9.7	●
14.500	145		14.50	2.6	6.0	9.7	●
14.600	145		14.60	2.7	6.0	9.7	●
14.680	145	37/64	14.68	2.7	6.0	9.7	●
14.700	145		14.70	2.7	6.0	9.7	●
14.800	145		14.80	2.7	6.0	9.7	●
15.000	150		15.00	2.7	6.0	9.9	●
15.080	150	19/32	15.08	2.7	6.0	9.9	●
15.100	150		15.10	2.7	6.0	9.9	●
15.200	150		15.20	2.8	6.0	9.9	●
15.300	150		15.30	2.8	6.0	9.9	●
15.480	150	39/64	15.48	2.8	6.0	9.9	●
15.500	155		15.50	2.8	6.0	9.9	●
15.600	155		15.60	2.9	6.0	9.9	●
15.700	155		15.70	2.9	6.0	9.9	●
15.800	155		15.80	2.9	6.0	9.9	●
15.870	155	5/8	15.87	2.9	6.0	9.9	●
16.000	160		16.00	2.9	7.0	11.1	●
16.270	160	41/64	16.27	3.0	7.0	11.1	●
16.500	165		16.50	3.0	7.0	11.1	●
16.670	165	21/32	16.67	3.0	7.0	11.1	●
17.000	170		17.00	3.1	7.0	11.1	●
17.070	170	43/64	17.07	3.1	7.0	11.1	●
17.460	170	11/16	17.46	3.1	7.0	11.1	●
17.500	175		17.50	3.2	7.0	11.1	●
17.600	175		17.60	3.2	7.0	11.1	●
17.860	175	45/64	17.86	3.3	7.0	11.1	●

Order no. = Guhring no. + Code-no.

Guhring no	4113
DIN	Guhring std.
Tool material	Solid carbide
P	○
M	
K	●
N	
S	
H	
Surface f nish	FIRE
Discount group	141

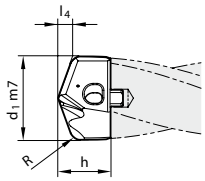

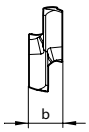

Code no.	Holder size	d1 m7 inch	d1 m7 mm	l4 mm	b mm	h mm	Availability
18.000	180		18.00	3.3	8.0	12.5	●
18.260	180	23/32	18.26	3.3	8.0	12.5	●
18.500	185		18.50	3.4	8.0	12.5	●
18.650	185	47/64	18.65	3.4	8.0	12.5	●
19.000	190		19.00	3.5	8.0	12.5	●
19.050	190	3/4	19.05	3.5	8.0	12.5	●
19.450	190	49/64	19.45	3.5	8.0	12.5	●
19.500	195		19.50	3.5	8.0	12.5	●
19.600	195		19.60	3.6	8.0	12.5	●
19.840	195	25/32	19.84	3.6	8.0	12.5	●
20.000	200		20.00	3.6	9.0	13.8	●
20.240	200	51/64	20.24	3.6	9.0	13.8	●
20.500	205		20.50	3.7	9.0	13.8	●
20.640	205	13/16	20.64	3.8	9.0	13.8	●
21.000	210		21.00	3.8	9.0	13.8	●
21.030	210	53/64	21.03	3.8	9.0	13.8	●
21.100	210		21.10	3.9	9.0	13.8	●
21.430	210	27/32	21.43	3.9	9.0	13.8	●
21.500	215		21.50	3.9	9.0	13.8	●
21.830	215	55/64	21.83	4.0	9.0	13.8	●
22.000	220		22.00	4.0	10.0	15.2	●
22.220	220	7/8	22.22	4.0	10.0	15.2	●
22.500	225		22.50	4.1	10.0	15.2	●
22.620	225	57/64	22.62	4.1	10.0	15.2	●
23.000	230		23.00	4.2	10.0	15.2	●
23.020	230	29/32	23.02	4.2	10.0	15.2	●
23.420	230	59/64	23.42	4.3	10.0	15.2	●
23.500	235		23.50	4.3	10.0	15.2	●
23.810	235	15/16	23.81	4.3	10.0	15.2	●
24.000	240		24.00	4.4	11.0	15.7	●
24.100	240		24.10	4.4	11.0	15.7	●
24.210	240	61/64	24.21	4.4	11.0	15.7	●
24.500	245		24.50	4.5	11.0	15.7	●
24.610	245	31/32	24.61	4.5	11.0	15.7	●
25.000	250		25.00	4.5	11.0	15.7	●
25.400	250	1	25.40	4.6	11.0	15.7	●
25.500	255		25.50	4.6	11.0	15.7	●

Inserts are always supplied with clamping screw, Guhring no. 4071.

HT 800 WP Interchangeable Inserts For Machining Aluminium

Order no. = Guhring no. + Code-no.

Guhring no	4114
DIN	Guhring std.
Tool material	Solid carbide
P	
M	
K	
N	●
S	
H	
Surface f nish	bright
Discount group	141

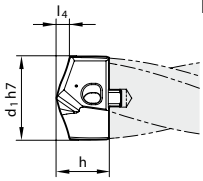

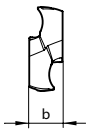

Code no.	Holder size	d1 h7 inch	d1 h7 mm	l4 mm	b mm	h mm	Availability
11.000	110		11.00	2.1	4.5	7.5	●
11.200	110		11.20	2.1	4.5	7.5	●
11.500	115		11.50	2.1	4.5	7.5	●
11.510	115	29/64	11.51	2.1	4.5	7.5	●
11.700	115		11.70	2.1	4.5	7.5	●
11.800	115		11.80	2.1	4.5	7.5	●
11.910	115	15/32	11.91	2.2	4.5	7.5	●
12.000	120		12.00	2.2	5.0	7.8	●
12.100	120		12.10	2.2	5.0	7.8	●
12.200	120		12.20	2.2	5.0	7.8	●
12.300	120	31/64	12.30	2.2	5.0	7.8	●
12.500	125		12.50	2.3	5.0	7.8	●
12.600	125		12.60	2.3	5.0	7.8	●
12.700	125	1/2	12.70	2.3	5.0	7.8	●
12.800	125		12.80	2.3	5.0	7.8	●
12.900	125		12.90	2.3	5.0	7.8	●
13.000	130		13.00	2.4	5.5	8.6	●
13.100	130	33/64	13.10	2.4	5.5	8.6	●
13.490	130	17/32	13.49	2.4	5.5	8.6	●
13.500	135		13.50	2.4	5.5	8.6	●
13.600	135		13.60	2.4	5.5	8.6	●
13.700	135		13.70	2.4	5.5	8.6	●
13.800	135		13.80	2.5	5.5	8.6	●
13.890	135	35/64	13.89	2.5	5.5	8.6	●
14.000	140		14.00	2.5	6.0	9.7	●
14.100	140		14.10	2.5	6.0	9.7	●
14.290	140	9/16	14.29	2.6	6.0	9.7	●
14.400	140		14.40	2.6	6.0	9.7	●
14.500	145		14.50	2.6	6.0	9.7	●
14.600	145		14.60	2.7	6.0	9.7	●
14.680	145	37/64	14.68	2.7	6.0	9.7	●
14.700	145		14.70	2.7	6.0	9.7	●
14.800	145		14.80	2.7	6.0	9.7	●
15.000	150		15.00	2.7	6.0	9.9	●
15.080	150	19/32	15.08	2.7	6.0	9.9	●
15.100	150		15.10	2.7	6.0	9.9	●
15.200	150		15.20	2.8	6.0	9.9	●
15.300	150		15.30	2.8	6.0	9.9	●
15.480	150	39/64	15.48	2.8	6.0	9.9	●
15.500	155		15.50	2.8	6.0	9.9	●
15.600	155		15.60	2.9	6.0	9.9	●
15.700	155		15.70	2.9	6.0	9.9	●
15.800	155		15.80	2.9	6.0	9.9	●
15.870	155	5/8	15.87	2.9	6.0	9.9	●
16.000	160		16.00	2.9	7.0	11.1	●
16.270	160	41/64	16.27	3.0	7.0	11.1	●
16.500	165		16.50	3.0	7.0	11.1	●
16.670	165	21/32	16.67	3.0	7.0	11.1	●
17.000	170		17.00	3.1	7.0	11.1	●
17.070	170	43/64	17.07	3.1	7.0	11.1	●
17.460	170	11/16	17.46	3.1	7.0	11.1	●
17.500	175		17.50	3.2	7.0	11.1	●
17.600	175		17.60	3.2	7.0	11.1	●
17.860	175	45/64	17.86	3.3	7.0	11.1	●

Order no. = Guhring no. + Code-no.

Guhring no	4114
DIN	Guhring std.
Tool material	Solid carbide
P	
M	
K	
N	●
S	
H	
Surface f nish	bright
Discount group	141

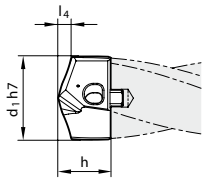

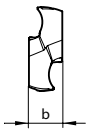

Code no.	Holder size	d1 h7 inch	d1 h7 mm	l4 mm	b mm	h mm	Availability
18.000	180		18.00	3.3	8.0	12.5	●
18.260	180	23/32	18.26	3.3	8.0	12.5	●
18.500	185		18.50	3.4	8.0	12.5	●
18.650	185	47/64	18.65	3.4	8.0	12.5	●
19.000	190		19.00	3.5	8.0	12.5	●
19.050	190	3/4	19.05	3.5	8.0	12.5	●
19.450	190	49/64	19.45	3.5	8.0	12.5	●
19.500	195		19.50	3.5	8.0	12.5	●
19.600	195		19.60	3.6	8.0	12.5	●
19.840	195	25/32	19.84	3.6	8.0	12.5	●
20.000	200		20.00	3.6	9.0	13.8	●
20.240	200	51/64	20.24	3.6	9.0	13.8	●
20.500	205		20.50	3.7	9.0	13.8	●
20.640	205	13/16	20.64	3.8	9.0	13.8	●
21.000	210		21.00	3.8	9.0	13.8	●
21.030	210	53/64	21.03	3.8	9.0	13.8	●
21.100	210		21.10	3.9	9.0	13.8	●
21.430	210	27/32	21.43	3.9	9.0	13.8	●
21.500	215		21.50	3.9	9.0	13.8	●
21.830	215	55/64	21.83	4.0	9.0	13.8	●
22.000	220		22.00	4.0	10.0	15.2	●
22.220	220	7/8	22.22	4.0	10.0	15.2	●
22.500	225		22.50	4.1	10.0	15.2	●
22.620	225	57/64	22.62	4.1	10.0	15.2	●
23.000	230		23.00	4.2	10.0	15.2	●
23.020	230	29/32	23.02	4.2	10.0	15.2	●
23.420	230	59/64	23.42	4.3	10.0	15.2	●
23.500	235		23.50	4.3	10.0	15.2	●
23.810	235	15/16	23.81	4.3	10.0	15.2	●
24.000	240		24.00	4.4	11.0	15.7	●
24.100	240		24.10	4.4	11.0	15.7	●
24.210	240	61/64	24.21	4.4	11.0	15.7	●
24.500	245		24.50	4.5	11.0	15.7	●
24.610	245	31/32	24.61	4.5	11.0	15.7	●
25.000	250		25.00	4.5	11.0	15.7	●
25.400	250	1	25.40	4.6	11.0	15.7	●
25.500	255		25.50	4.6	11.0	15.7	●

Inserts are always supplied with clamping screw, Guhring no. 4071.

HT 800 WP Interchangeable Inserts For Pilot Holes

Order no. = Guhring no. + Code-no.

Guhring no	4111
DIN	Guhring std.
Tool material	Solid carbide
P	○
M	○
K	○
N	○
S	
H	
Surface f nish	nanoA
Discount group	141

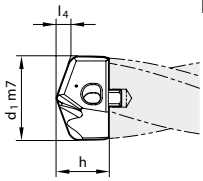

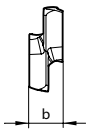

Code no.	Holder size	d1 m7 inch	d1 m7 mm	l4 mm	b mm	h mm	Availability
11.000	110		11.00	1.5	4.5	6.9	●
11.200	110		11.20	1.5	4.5	6.9	●
11.500	115		11.50	1.5	4.5	6.9	●
11.510	115	29/64	11.51	1.5	4.5	6.9	●
11.700	115		11.70	1.6	4.5	6.9	●
11.800	115		11.80	1.6	4.5	6.9	●
11.910	115	15/32	11.91	1.6	4.5	6.9	●
12.000	120		12.00	1.6	5.0	7.1	●
12.100	120		12.10	1.6	5.0	7.1	●
12.200	120		12.20	1.6	5.0	7.1	●
12.300	120	31/64	12.30	1.6	5.0	7.1	●
12.500	125		12.50	1.7	5.0	7.1	●
12.600	125		12.60	1.7	5.0	7.1	●
12.700	125	1/2	12.70	1.7	5.0	7.1	●
12.800	125		12.80	1.7	5.0	7.1	●
12.900	125		12.90	1.7	5.0	7.1	●
13.000	130		13.00	1.7	5.5	7.9	●
13.100	130	33/64	13.10	1.7	5.5	7.9	●
13.490	130	17/32	13.49	1.8	5.5	7.9	●
13.500	135		13.50	1.8	5.5	7.9	●
13.600	135		13.60	1.8	5.5	7.9	●
13.700	135		13.70	1.8	5.5	7.9	●
13.800	135		13.80	1.9	5.5	7.9	●
13.890	135	35/64	13.89	1.9	5.5	7.9	●
14.000	140		14.00	1.9	6.0	9.1	●
14.100	140		14.10	1.9	6.0	9.1	●
14.290	140	9/16	14.29	1.9	6.0	9.1	●
14.400	140		14.40	1.9	6.0	9.1	●
14.500	145		14.50	1.9	6.0	9.1	●
14.600	145		14.60	2.0	6.0	9.1	●
14.680	145	37/64	14.68	2.0	6.0	9.1	●
14.700	145		14.70	2.0	6.0	9.1	●
14.800	145		14.80	2.0	6.0	9.1	●
15.000	150		15.00	2.0	6.0	9.1	●
15.080	150	19/32	15.08	2.0	6.0	9.1	●
15.100	150		15.10	2.0	6.0	9.1	●
15.200	150		15.20	2.0	6.0	9.1	●
15.300	150		15.30	2.1	6.0	9.1	●
15.480	150	39/64	15.48	2.1	6.0	9.1	●
15.500	155		15.50	2.1	6.0	9.1	●
15.600	155		15.60	2.1	6.0	9.1	●
15.700	155		15.70	2.1	6.0	9.1	●
15.800	155		15.80	2.1	6.0	9.1	●
15.870	155	5/8	15.87	2.1	6.0	9.1	●
16.000	160		16.00	2.1	7.0	10.2	●
16.270	160	41/64	16.27	2.2	7.0	10.2	●
16.500	165		16.50	2.2	7.0	10.2	●
16.670	165	21/32	16.67	2.2	7.0	10.2	●
17.000	170		17.00	2.3	7.0	10.2	●
17.070	170	43/64	17.07	2.3	7.0	10.2	●
17.460	170	11/16	17.46	2.3	7.0	10.2	●
17.500	175		17.50	2.3	7.0	10.2	●
17.600	175		17.60	2.3	7.0	10.2	●
17.860	175	45/64	17.86	2.4	7.0	10.2	●

Order no. = Guhring no. + Code-no.

Guhring no	4111
DIN	Guhring std.
Tool material	Solid carbide
P	○
M	○
K	○
N	○
S	
H	
Surface f nish	nanoA
Discount group	141

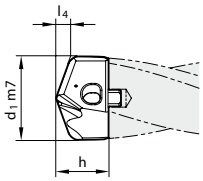

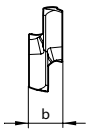

Code no.	Holder size	d1 m7 inch	d1 m7 mm	l4 mm	b mm	h mm	Availability
18.000	180		18.00	2.4	8.0	11.7	●
18.260	180	23/32	18.26	2.4	8.0	11.7	●
18.500	185		18.50	2.5	8.0	11.7	●
18.650	185	47/64	18.65	2.5	8.0	11.7	●
19.000	190		19.00	2.5	8.0	11.7	●
19.050	190	3/4	19.05	2.5	8.0	11.7	●
19.450	190	49/64	19.45	2.6	8.0	11.7	●
19.500	195		19.50	2.6	8.0	11.7	●
19.600	195		19.60	2.6	8.0	11.7	●
19.840	195	25/32	19.84	2.7	8.0	11.7	●
20.000	200		20.00	2.7	9.0	12.9	●
20.240	200	51/64	20.24	2.7	9.0	12.9	●
20.500	205		20.50	2.7	9.0	12.9	●
20.640	205	13/16	20.64	2.8	9.0	12.9	●
21.000	210		21.00	2.8	9.0	12.9	●
21.030	210	53/64	21.03	2.8	9.0	12.9	●
21.100	210		21.10	2.8	9.0	12.9	●
21.430	210	27/32	21.43	2.9	9.0	12.9	●
21.500	215		21.50	2.9	9.0	12.9	●
21.830	215	55/64	21.83	2.9	9.0	12.9	●
22.000	220		22.00	3.0	10.0	14.3	●
22.220	220	7/8	22.22	3.0	10.0	14.3	●
22.500	225		22.50	3.0	10.0	14.3	●
22.620	225	57/64	22.62	3.0	10.0	14.3	●
23.000	230		23.00	3.1	10.0	14.3	●
23.020	230	29/32	23.02	3.1	10.0	14.3	●
23.420	230	59/64	23.42	3.1	10.0	14.3	●
23.500	235		23.50	3.1	10.0	14.3	●
23.810	235	15/16	23.81	3.2	10.0	14.3	●
24.000	240		24.00	3.2	11.0	14.7	●
24.100	240		24.10	3.2	11.0	14.7	●
24.210	240	61/64	24.21	3.2	11.0	14.7	●
24.500	245		24.50	3.3	11.0	14.7	●
24.610	245	31/32	24.61	3.3	11.0	14.7	●
25.000	250		25.00	3.4	11.0	14.7	●
25.400	250	1	25.40	3.4	11.0	14.7	●
25.500	255		25.50	3.4	11.0	14.7	●

Inserts are always supplied with clamping screw, Guhring no. 4071.

HT 800 WP Countersink Inserts For Pilot and Countersink Holders

Order no. = Guhring no. + Code-no.

Guhring no	7645
DIN	Guhring std.
Tool material	Solid carbide
P	●
M	○
K	○
N	
S	
H	
Surface f nish	TiN
Discount group	142

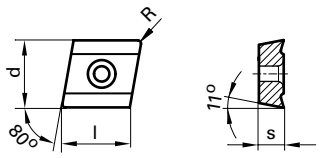

Code no.	size	d mm	s mm	R mm	l mm	Availability
52,040	CPGT050204R	5.56	2.38	0.4	5.64	●
62,040	CPGT060204R	6.35	2.38	0.4	6.45	●

Order no. = Guhring no. + Code-no.

Guhring no	7632
DIN	Guhring std.
Tool material	Solid carbide
P	○
M	
K	●
N	
S	
H	
Surface f nish	TiAlN
Discount group	142

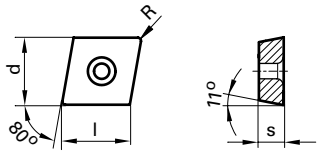

Code no.	size	d mm	s mm	R mm	l mm	Availability
52,040	CPGW050204	5.56	2.38	0.4	5.6	●
62,040	CPGW060204	6.35	2.38	0.4	6.4	●

Order no. = Guhring no. + Code-no.

Guhring no	7635
DIN	Guhring std.
Tool material	Solid carbide
P	
M	
K	
N	●
S	
H	
Surface f nish	bright
Discount group	142

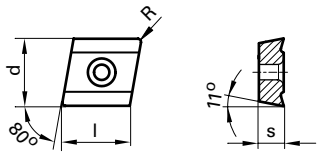

Code no.	size	d mm	s mm	R mm	l mm	Availability
52,040	CPGT050204R	5.56	2.38	0.4	5.64	●
62,040	CPGT060204R	6.35	2.38	0.4	6.45	●

HT 800 WP Interchangeable Insert Holders 1 x D For Pilot Drilling and Countersinking

Order no. = Guhring no. + Code-no.

Guhring no.	4105
Discount group	140

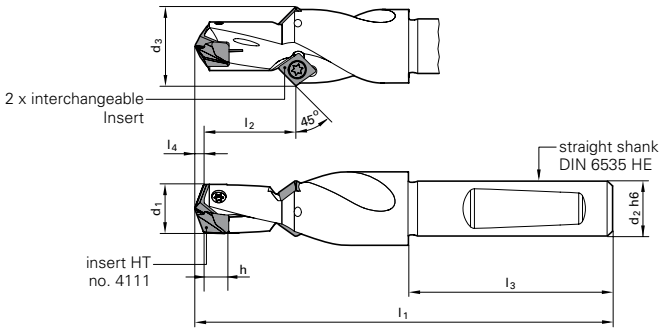

*l1 with pilot insert Guhring no. 4111only. With drilling insert Guhring no. 4112, 4113 or 4114, see h and l4 dimensions page 8 to 11!

Code no.	Holder size	d1 mm	d2h6 mm	d3 mm	incl. WP l1* mm	l2 max mm	l3 mm	Availability
11,000	110	11,00-11,99	12,00	17,00	81,00	14,80	45,00	●
11,005	110	11,00-11,99	12,70	17,00	81,00	14,80	45,00	●
12,000	120	12,00-12,99	12,00	18,00	84,00	15,80	45,00	●
12,005	120	12,00-12,99	12,70	18,00	84,00	15,80	45,00	●
13,000	130	13,00-13,99	14,00	18,00	86,00	16,30	45,00	●
13,005	130	13,00-13,99	15,875	18,00	86,00	16,30	45,00	●
14,000	140	14,00-15,99	14,00	18,00	93,00	17,40	48,00	●
14,005	140	14,00-15,99	15,875	18,00	93,00	17,40	48,00	●
16,000	160	16,00-17,99	16,00	20,00	99,00	19,40	48,00	●
16,005	160	16,00-17,99	15,875	20,00	99,00	19,40	48,00	●
18,000	180	18,00-19,99	18,00	22,00	106,00	21,40	50,00	●
18,005	180	18,00-19,99	19,05	22,00	106,00	21,40	50,00	●
20,000	200	20,00-21,99	25,00	24,00	117,00	23,40	56,00	●
20,005	200	20,00-21,99	25,40	24,00	117,00	23,40	56,00	●
22,000	220	22,00-23,99	25,00	26,00	122,00	25,40	56,00	●
22,005	220	22,00-23,99	25,40	26,00	122,00	25,40	56,00	●
24,000	240	24,00-25,99	25,00	28,00	128,00	27,40	56,00	●
24,005	240	24,00-25,99	25,40	28,00	128,00	27,40	56,00	●

Holders are always supplied with clamping screw, Guhring no. 4071, and clamping key, Guhring no. 1612.

HT 800 WP Interchangeable Insert Holders 1.5 x D

Order no. = Guhring no. + Code-no.

Guhring no.	4106
Discount group	140

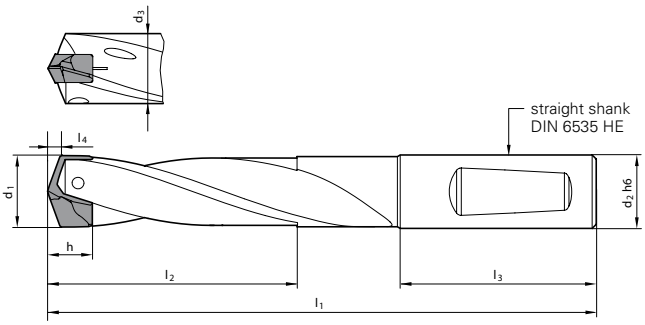

*l1 with drilling insert Guhring no. 4112, 4113 or 4114 only. With pilot insert Guhring no. 4111, see h and l4 dimensions page 8 to 11!

Code no.	Holder size	d1 mm	d2h6 mm	d3 mm	incl. WP l1* mm	l2 max mm	l3 mm	Availability
11,000	110	11.00 - 11.49	12.00	10.70	84.00	19.30	45.00	●
11,005	110	11.00 - 11.49	12.70	10.70	84.00	19.30	45.00	●
11,500	115	11.50 - 11.99	12.00	11.20	85.00	20.10	45.00	●
11,505	115	11.50 - 11.99	12.70	11.20	85.00	20.10	45.00	●
12,000	120	12.00 - 12.49	12.00	11.70	87.00	21.00	45.00	●
12,005	120	12.00 - 12.49	12.70	11.70	87.00	21.00	45.00	●
12,500	125	12.50 - 12.99	14.00	12.20	89.00	21.90	45.00	●
12,505	125	12.50 - 12.99	15.875	12.20	89.00	21.90	45.00	●
13,000	130	13.00 - 13.49	14.00	12.70	90.00	22.60	45.00	●
13,005	130	13.00 - 13.49	15.875	12.70	90.00	22.60	45.00	●
13,500	135	13.50 - 13.99	14.00	13.20	92.00	23.60	45.00	●
13,505	135	13.50 - 13.99	15.875	13.20	92.00	23.60	45.00	●
14,000	140	14.00 - 14.49	14.00	13.70	93.00	24.50	45.00	●
14,005	140	14.00 - 14.49	15.875	13.70	93.00	24.50	45.00	●
14,500	145	14.50 - 14.99	16.00	14.20	98.00	25.30	48.00	●
14,505	145	14.50 - 14.99	15.875	14.20	98.00	25.30	48.00	●
15,000	150	15.00 - 15.49	16.00	14.70	100.00	26.10	48.00	●
15,005	150	15.00 - 15.49	15.875	14.70	100.00	26.10	48.00	●
15,500	155	15.50 - 15.99	16.00	15.20	101.00	27.00	48.00	●
15,505	155	15.50 - 15.99	15.875	15.20	101.00	27.00	48.00	●
16,000	160	16.00 - 16.49	16.00	15.70	102.00	27.80	48.00	●
16,005	160	16.00 - 16.49	15.875	15.70	102.00	27.80	48.00	●
16,500	165	16.50 - 16.99	18.00	16.20	105.00	28.70	48.00	●
16,505	165	16.50 - 16.99	19.05	16.20	105.00	28.70	48.00	●
17,000	170	17.00 - 17.49	18.00	16.70	106.00	29.60	48.00	●
17,005	170	17.00 - 17.49	19.05	16.70	106.00	29.60	48.00	●
17,500	175	17.50 - 17.99	18.00	17.20	107.00	30.40	48.00	●
17,505	175	17.50 - 17.99	19.05	17.20	107.00	30.40	48.00	●
18,000	180	18.00 - 18.49	18.00	17.70	109.00	31.20	48.00	●
18,005	180	18.00 - 18.49	19.05	17.70	109.00	31.20	48.00	●
18,500	185	18.50 - 18.99	20.00	18.20	113.00	32.10	50.00	●
18,505	185	18.50 - 18.99	19.05	18.20	113.00	32.10	50.00	●
19,000	190	19.00 - 19.49	20.00	18.70	114.00	32.90	50.00	●
19,005	190	19.00 - 19.49	19.05	18.70	114.00	32.90	50.00	●
19,500	195	19.50 - 19.99	20.00	19.20	116.00	33.70	50.00	●
19,505	195	19.50 - 19.99	19.05	19.20	116.00	33.70	50.00	●
20,000	200	20.00 - 20.49	20.00	19.70	117.00	34.60	50.00	●
20,005	200	20.00 - 20.49	19.05	19.70	117.00	34.60	50.00	●
20,500	205	20.50 - 20.99	25.00	20.20	128.00	35.50	56.00	●
20,505	205	20.50 - 20.99	25.40	20.20	128.00	35.50	56.00	●
21,000	210	21.00 - 21.49	25.00	20.70	129.00	36.40	56.00	●
21,005	210	21.00 - 21.49	25.40	20.70	129.00	36.40	56.00	●

Holders are always supplied with clamping screw, Guhring no. 4071, and clamping key, Guhring no. 1612.

HT 800 WP Interchangeable Insert Holders 1.5 x D

Order no. = Guhring no. + Code-no.

Guhring no.	4106
Discount group	140

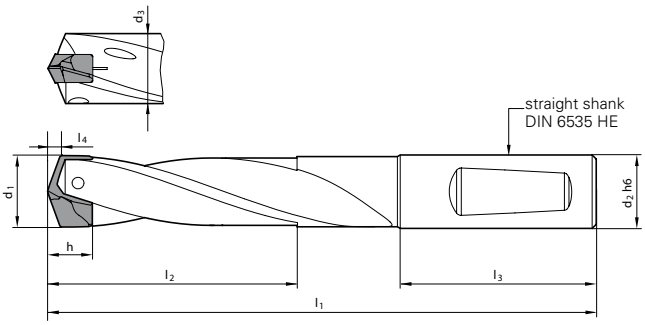

*l1 with drilling insert Guhring no. 4112, 4113 or 4114 only. With pilot insert Guhring no. 4111, see h and l4 dimensions page 8 to 11!

Code no.	Holder size	d1 mm	d2h6 mm	d3 mm	incl. WP l1* mm	l2 max mm	l3 mm	Availability
21,500	215	21.50 - 21.99	25.00	21.20	130.00	37.20	56.00	●
21,505	215	21.50 - 21.99	25.40	21.20	130.00	37.20	56.00	●
22,000	220	22.00 - 22.49	25.00	21.70	131.00	38.00	56.00	●
22,005	220	22.00 - 22.49	25.40	21.70	131.00	38.00	56.00	●
22,500	225	22.50 - 22.99	25.00	22.20	134.00	38.90	56.00	●
22,505	225	22.50 - 22.99	25.40	22.20	134.00	38.90	56.00	●
23,000	230	23.00 - 23.49	25.00	22.70	135.00	39.80	56.00	●
23,005	230	23.00 - 23.49	25.40	22.70	135.00	39.80	56.00	●
23,500	235	23.50 - 23.99	25.00	23.20	137.00	40.60	56.00	●
23,505	235	23.50 - 23.99	25.40	23.20	137.00	40.60	56.00	●
24,000	240	24.00 - 24.49	25.00	23.70	138.00	41.50	56.00	●
24,005	240	24.00 - 24.49	25.40	23.70	138.00	41.50	56.00	●
24,500	245	24.50 - 24.99	25.00	24.20	140.00	42.30	56.00	●
24,505	245	24.50 - 24.99	25.40	24.20	140.00	42.30	56.00	●
25,000	250	25.00 - 25.49	25.00	24.70	142.00	43.20	56.00	●
25,005	250	25.00 - 25.49	25.40	24.70	142.00	43.20	56.00	●
25,500	255	25.50 - 25.99	32.00	25.20	148.00	44.00	60.00	●
25,505	255	25.50 - 25.99	31.75	25.20	148.00	44.00	60.00	●

Holders are always supplied with clamping screw, Guhring no. 4071, and clamping key, Guhring no. 1612.

HT 800 WP Interchangeable Insert Holders 3 x D

Order no. = Guhring no. + Code-no.

Guhring no.	4107
Discount group	140

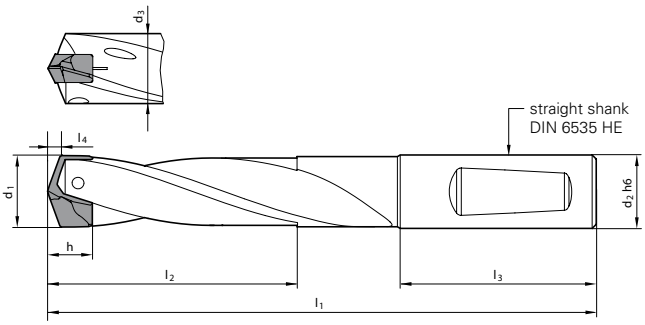

*l1 with drilling insert Guhring no. 4112, 4113 or 4114 only. With pilot insert Guhring no. 4111, see h and l4 dimensions page 8 to 11!

Code no.	Holder size	d1 mm	d2h6 mm	d3 mm	incl. WP l1* mm	l2 max mm	l3 mm	Availability
11,000	110	11.00 - 11.49	12.00	10.70	101.00	36.60	45.00	●
11,005	110	11.00 - 11.49	12.70	10.70	101.00	36.60	45.00	●
11,500	115	11.50 - 11.99	12.00	11.20	103.00	38.10	45.00	●
11,505	115	11.50 - 11.99	12.70	11.20	103.00	38.10	45.00	●
12,000	120	12.00 - 12.49	12.00	11.70	106.00	39.70	45.00	●
12,005	120	12.00 - 12.49	12.70	11.70	106.00	39.70	45.00	●
12,500	125	12.50 - 12.99	14.00	12.20	108.00	41.30	45.00	●
12,505	125	12.50 - 12.99	15.875	12.20	108.00	41.30	45.00	●
13,000	130	13.00 - 13.49	14.00	12.70	110.00	42.90	45.00	●
13,005	130	13.00 - 13.49	15.875	12.70	110.00	42.90	45.00	●
13,500	135	13.50 - 13.99	14.00	13.20	113.00	44.60	45.00	●
13,505	135	13.50 - 13.99	15.875	13.20	113.00	44.60	45.00	●
14,000	140	14.00 - 14.49	14.00	13.70	115.00	46.20	45.00	●
14,005	140	14.00 - 14.49	15.875	13.70	115.00	46.20	45.00	●
14,500	145	14.50 - 14.99	16.00	14.20	120.00	47.80	48.00	●
14,505	145	14.50 - 14.99	15.875	14.20	120.00	47.80	48.00	●
15,000	150	15.00 - 15.49	16.00	14.70	123.00	49.30	48.00	●
15,005	150	15.00 - 15.49	15.875	14.70	123.00	49.30	48.00	●
15,500	155	15.50 - 15.99	16.00	15.20	125.00	50.90	48.00	●
15,505	155	15.50 - 15.99	15.875	15.20	125.00	50.90	48.00	●
16,000	160	16.00 - 16.49	16.00	15.70	127.00	52.90	48.00	●
16,005	160	16.00 - 16.49	15.875	15.70	127.00	52.90	48.00	●
16,500	165	16.50 - 16.99	18.00	16.20	130.00	54.10	48.00	●
16,505	165	16.50 - 16.99	19.05	16.20	130.00	54.10	48.00	●
17,000	170	17.00 - 17.49	18.00	16.70	132.00	55.80	48.00	●
17,005	170	17.00 - 17.49	19.05	16.70	132.00	55.80	48.00	●
17,500	175	17.50 - 17.99	18.00	17.20	134.00	57.40	48.00	●
17,505	175	17.50 - 17.99	19.05	17.20	134.00	57.40	48.00	●
18,000	180	18.00 - 18.49	18.00	17.70	137.00	58.90	48.00	●
18,005	180	18.00 - 18.49	19.05	17.70	137.00	58.90	48.00	●
18,500	185	18.50 - 18.99	20.00	18.20	141.00	60.50	50.00	●
18,505	185	18.50 - 18.99	19.05	18.20	141.00	60.50	50.00	●
19,000	190	19.00 - 19.49	20.00	18.70	143.00	62.10	50.00	●
19,005	190	19.00 - 19.49	19.05	18.70	143.00	62.10	50.00	●
19,500	195	19.50 - 19.99	20.00	19.20	146.00	63.70	50.00	●
19,505	195	19.50 - 19.99	19.05	19.20	146.00	63.70	50.00	●
20,000	200	20.00 - 20.49	20.00	19.70	148.00	65.30	50.00	●
20,005	200	20.00 - 20.49	19.05	19.70	148.00	65.30	50.00	●
20,500	205	20.50 - 20.99	25.00	20.20	159.00	67.00	56.00	●
20,505	205	20.50 - 20.99	25.40	20.20	159.00	67.00	56.00	●
21,000	210	21.00 - 21.49	25.00	20.70	161.00	68.60	56.00	●
21,005	210	21.00 - 21.49	25.40	20.70	161.00	68.60	56.00	●

Holders are always supplied with clamping screw, Guhring no. 4071, and clamping key, Guhring no. 1612.

HT 800 WP Interchangeable Insert Holders 3 x D

Order no. = Guhring no. + Code-no.

Guhring no.	**4107**
Discount group	**140**

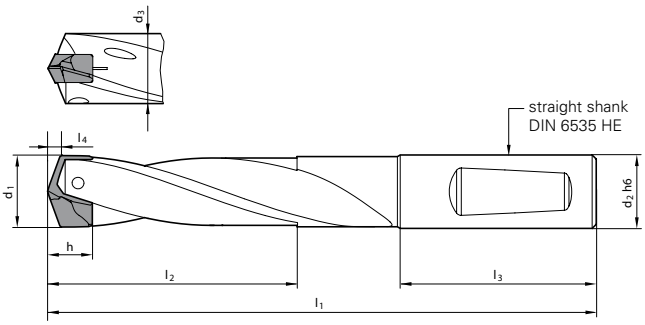

*l1 with drilling insert Guhring no. 4112, 4113 or 4114 only. With pilot insert Guhring no. 4111, see h and l4 dimensions page 8 to 11!

Code no.	Holder size	d1 mm	d2h6 mm	d3 mm	incl. WP l1* mm	l2 max mm	l3 mm	Availability
21,500	215	21.50 - 21.99	25.00	21.20	163.00	70.10	56.00	●
21,505	215	21.50 - 21.99	25.40	21.20	163.00	70.10	56.00	●
22,000	220	22.00 - 22.49	25.00	21.70	165.00	71.70	56.00	●
22,005	220	22.00 - 22.49	25.40	21.70	165.00	71.70	56.00	●
22,500	225	22.50 - 22.99	25.00	22.20	168.00	73.30	56.00	●
22,505	225	22.50 - 22.99	25.40	22.20	168.00	73.30	56.00	●
23,000	230	23.00 - 23.49	25.00	22.70	170.00	74.90	56.00	●
23,005	230	23.00 - 23.49	25.40	22.70	170.00	74.90	56.00	●
23,500	235	23.50 - 23.99	25.00	23.20	173.00	76.50	56.00	●
23,505	235	23.50 - 23.99	25.40	23.20	173.00	76.50	56.00	●
24,000	240	24.00 - 24.49	25.00	23.70	175.00	78.10	56.00	●
24,005	240	24.00 - 24.49	25.40	23.70	175.00	78.10	56.00	●
24,500	245	24.50 - 24.99	25.00	24.20	177.00	79.70	56.00	●
24,505	245	24.50 - 24.99	25.40	24.20	177.00	79.70	56.00	●
25,000	250	25.00 - 25.49	25.00	24.70	180.00	81.30	56.00	●
25,005	250	25.00 - 25.49	25.40	24.70	180.00	81.30	56.00	●
25,500	255	25.50 - 25.99	32.00	25.20	187.00	82.90	60.00	●
25,505	255	25.50 - 25.99	31.75	25.20	187.00	82.90	60.00	●

Holders are always supplied with clamping screw, Guhring no. 4071, and clamping key, Guhring no. 1612.

HT 800 WP Interchangeable Insert Holders 5 x D

Order no. = Guhring no. + Code-no.

Guhring no.	4108
Discount group	140

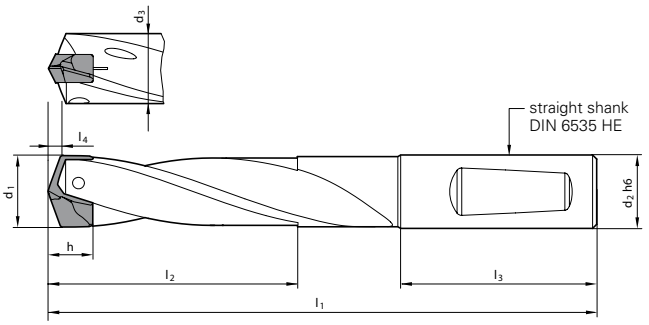

*l1 with drilling insert Guhring no. 4112, 4113 or 4114 only. With pilot insert Guhring no. 4111, see h and l4 dimensions page 8 to 11!

Code no.	Holder size	d1 mm	d2h6 mm	d3 mm	incl. WP l1* mm	l2 max mm	l3 mm	Availability
11,000	110	11.00 - 11.49	12.00	10.70	124.00	59.60	45.00	●
11,005	110	11.00 - 11.49	12.70	10.70	124.00	59.60	45.00	●
11,500	115	11.50 - 11.99	12.00	11.20	127.00	62.10	45.00	●
11,505	115	11.50 - 11.99	12.70	11.20	127.00	62.10	45.00	●
12,000	120	12.00 - 12.49	12.00	11.70	131.00	64.70	45.00	●
12,005	120	12.00 - 12.49	12.70	11.70	131.00	64.70	45.00	●
12,500	125	12.50 - 12.99	14.00	12.20	134.00	67.30	45.00	●
12,505	125	12.50 - 12.99	15.875	12.20	134.00	67.30	45.00	●
13,000	130	13.00 - 13.49	14.00	12.70	137.00	69.90	45.00	●
13,005	130	13.00 - 13.49	15.875	12.70	137.00	69.90	45.00	●
13,500	135	13.50 - 13.99	14.00	13.20	141.00	72.60	45.00	●
13,505	135	13.50 - 13.99	15.875	13.20	141.00	72.60	45.00	●
14,000	140	14.00 - 14.49	14.00	13.70	144.00	75.20	45.00	●
14,005	140	14.00 - 14.49	15.875	13.70	144.00	75.20	45.00	●
14,500	145	14.50 - 14.99	16.00	14.20	150.00	77.80	48.00	●
14,505	145	14.50 - 14.99	15.875	14.20	150.00	77.80	48.00	●
15,000	150	15.00 - 15.49	16.00	14.70	154.00	80.30	48.00	●
15,005	150	15.00 - 15.49	15.875	14.70	154.00	80.30	48.00	●
15,500	155	15.50 - 15.99	16.00	15.20	157.00	82.90	48.00	●
15,505	155	15.50 - 15.99	15.875	15.20	157.00	82.90	48.00	●
16,000	160	16.00 - 16.49	16.00	15.70	160.00	85.90	48.00	●
16,005	160	16.00 - 16.49	15.875	15.70	160.00	85.90	48.00	●
16,500	165	16.50 - 16.99	18.00	16.20	164.00	88.10	48.00	●
16,505	165	16.50 - 16.99	19.05	16.20	164.00	88.10	48.00	●
17,000	170	17.00 - 17.49	18.00	16.70	167.00	90.80	48.00	●
17,005	170	17.00 - 17.49	19.05	16.70	167.00	90.80	48.00	●
17,500	175	17.50 - 17.99	18.00	17.20	170.00	93.40	48.00	●
17,505	175	17.50 - 17.99	19.05	17.20	170.00	93.40	48.00	●
18,000	180	18.00 - 18.49	18.00	17.70	174.00	95.90	48.00	●
18,005	180	18.00 - 18.49	19.05	17.70	174.00	95.90	48.00	●
18,500	185	18.50 - 18.99	20.00	18.20	179.00	98.50	50.00	●
18,505	185	18.50 - 18.99	19.05	18.20	179.00	98.50	50.00	●
19,000	190	19.00 - 19.49	20.00	18.70	182.00	101.10	50.00	●
19,005	190	19.00 - 19.49	19.05	18.70	182.00	101.10	50.00	●
19,500	195	19.50 - 19.99	20.00	19.20	186.00	103.70	50.00	●
19,505	195	19.50 - 19.99	19.05	19.20	186.00	103.70	50.00	●
20,000	200	20.00 - 20.49	20.00	19.70	189.00	106.30	50.00	●
20,005	200	20.00 - 20.49	19.05	19.70	189.00	106.30	50.00	●
20,500	205	20.50 - 20.99	25.00	20.20	201.00	109.00	56.00	●
20,505	205	20.50 - 20.99	25.40	20.20	201.00	109.00	56.00	●
21,000	210	21.00 - 21.49	25.00	20.70	204.00	111.60	56.00	●
21,005	210	21.00 - 21.49	25.40	20.70	204.00	111.60	56.00	●

Holders are always supplied with clamping screw, Guhring no. 4071, and clamping key, Guhring no. 1612.

guhring@guhring-tools.ru
www.guhring-tools.ru

HT 800 WP Interchangeable Insert Holders 5 x D

Order no. = Guhring no. + Code-no.

Guhring no.	**4108**
Discount group	**140**

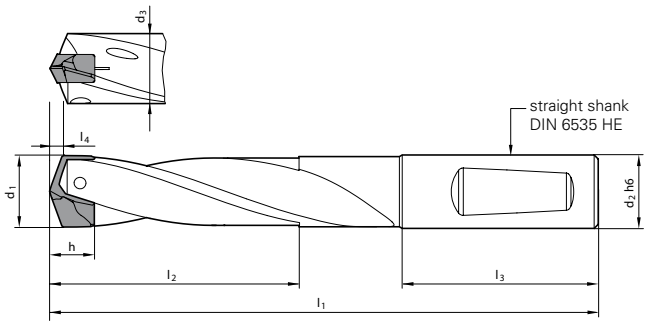

*l1 with drilling insert Guhring no. 4112, 4113 or 4114 only. With pilot insert Guhring no. 4111, see h and l4 dimensions page 8 to 11!

Code no.	Holder size	d1 mm	d2h6 mm	d3 mm	incl. WP l1* mm	l2 max mm	l3 mm	Availability
21,500	215	21.50 - 21.99	25.00	21.20	207.00	114.10	56.00	●
21,505	215	21.50 - 21.99	25.40	21.20	207.00	114.10	56.00	●
22,000	220	22.00 - 22.49	25.00	21.70	210.00	116.70	56.00	●
22,005	220	22.00 - 22.49	25.40	21.70	210.00	116.70	56.00	●
22,500	225	22.50 - 22.99	25.00	22.20	214.00	119.30	56.00	●
22,505	225	22.50 - 22.99	25.40	22.20	214.00	119.30	56.00	●
23,000	230	23.00 - 23.49	25.00	22.70	217.00	121.90	56.00	●
23,005	230	23.00 - 23.49	25.40	22.70	217.00	121.90	56.00	●
23,500	235	23.50 - 23.99	25.00	23.20	221.00	124.50	56.00	●
23,505	235	23.50 - 23.99	25.40	23.20	221.00	124.50	56.00	●
24,000	240	24.00 - 24.49	25.00	23.70	224.00	127.10	56.00	●
24,005	240	24.00 - 24.49	25.40	23.70	224.00	127.10	56.00	●
24,500	245	24.50 - 24.99	25.00	24.20	227.00	129.70	56.00	●
24,505	245	24.50 - 24.99	25.40	24.20	227.00	129.70	56.00	●
25,000	250	25.00 - 25.49	25.00	24.70	231.00	132.30	56.00	●
25,005	250	25.00 - 25.49	25.40	24.70	231.00	132.30	56.00	●
25,500	255	25.50 - 25.99	32.00	25.20	239.00	134.90	60.00	●
25,505	255	25.50 - 25.99	31.75	25.20	239.00	134.90	60.00	●

Holders are always supplied with clamping screw, Guhring no. 4071, and clamping key, Guhring no. 1612.

HT 800 WP Interchangeable Insert Holders 7 x D

Order no. = Guhring no. + Code-no.

Guhring no.	4109
Discount group	140

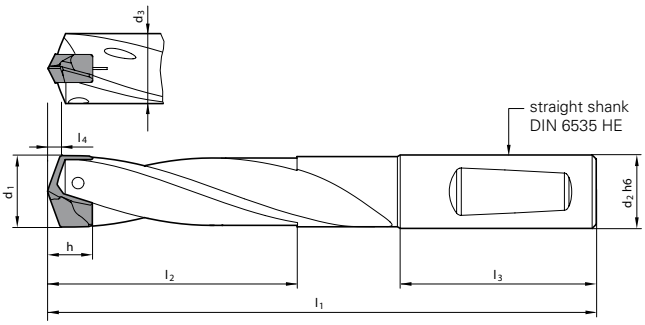

*l1 with drilling insert Guhring no. 4112, 4113 or 4114 only. With pilot insert Guhring no. 4111, see h and l4 dimensions page 8 to 11!

Code no.	Holder size	d1 mm	d2h6 mm	d3 mm	incl. WP l1* mm	l2 max mm	l3 mm	Availability
11,000	110	11.00 - 11.49	12.00	10.70	147.00	82.60	45.00	●
11,005	110	11.00 - 11.49	12.70	10.70	147.00	82.60	45.00	●
11,500	115	11.50 - 11.99	12.00	11.20	151.00	86.10	45.00	●
11,505	115	11.50 - 11.99	12.70	11.20	151.00	86.10	45.00	●
12,000	120	12.00 - 12.49	12.00	11.70	156.00	89.70	45.00	●
12,005	120	12.00 - 12.49	12.70	11.70	156.00	89.70	45.00	●
12,500	125	12.50 - 12.99	14.00	12.20	160.00	93.30	45.00	●
12,505	125	12.50 - 12.99	15.875	12.20	160.00	93.30	45.00	●
13,000	130	13.00 - 13.49	14.00	12.70	164.00	96.90	45.00	●
13,005	130	13.00 - 13.49	15.875	12.70	164.00	96.90	45.00	●
13,500	135	13.50 - 13.99	14.00	13.20	169.00	100.60	45.00	●
13,505	135	13.50 - 13.99	15.875	13.20	169.00	100.60	45.00	●
14,000	140	14.00 - 14.49	14.00	13.70	173.00	104.20	45.00	●
14,005	140	14.00 - 14.49	15.875	13.70	173.00	104.20	45.00	●
14,500	145	14.50 - 14.99	16.00	14.20	180.00	107.80	48.00	●
14,505	145	14.50 - 14.99	15.875	14.20	180.00	107.80	48.00	●
15,000	150	15.00 - 15.49	16.00	14.70	185.00	111.30	48.00	●
15,005	150	15.00 - 15.49	15.875	14.70	185.00	111.30	48.00	●
15,500	155	15.50 - 15.99	16.00	15.20	189.00	114.90	48.00	●
15,505	155	15.50 - 15.99	15.875	15.20	189.00	114.90	48.00	●
16,000	160	16.00 - 16.49	16.00	15.70	193.00	118.90	48.00	●
16,005	160	16.00 - 16.49	15.875	15.70	193.00	118.90	48.00	●
16,500	165	16.50 - 16.99	18.00	16.20	198.00	122.10	48.00	●
16,505	165	16.50 - 16.99	19.05	16.20	198.00	122.10	48.00	●
17,000	170	17.00 - 17.49	18.00	16.70	202.00	125.80	48.00	●
17,005	170	17.00 - 17.49	19.05	16.70	202.00	125.80	48.00	●
17,500	175	17.50 - 17.99	18.00	17.20	206.00	129.40	48.00	●
17,505	175	17.50 - 17.99	19.05	17.20	206.00	129.40	48.00	●
18,000	180	18.00 - 18.49	18.00	17.70	211.00	132.90	48.00	●
18,005	180	18.00 - 18.49	19.05	17.70	211.00	132.90	48.00	●
18,500	185	18.50 - 18.99	20.00	18.20	217.00	136.50	50.00	●
18,505	185	18.50 - 18.99	19.05	18.20	217.00	136.50	50.00	●
19,000	190	19.00 - 19.49	20.00	18.70	221.00	140.10	50.00	●
19,005	190	19.00 - 19.49	19.05	18.70	221.00	140.10	50.00	●
19,500	195	19.50 - 19.99	20.00	19.20	226.00	143.70	50.00	●
19,505	195	19.50 - 19.99	19.05	19.20	226.00	143.70	50.00	●
20,000	200	20.00 - 20.49	20.00	19.70	230.00	147.30	50.00	●
20,005	200	20.00 - 20.49	19.05	19.70	230.00	147.30	50.00	●
20,500	205	20.50 - 20.99	25.00	20.20	243.00	151.00	56.00	●
20,505	205	20.50 - 20.99	25.40	20.20	243.00	151.00	56.00	●
21,000	210	21.00 - 21.49	25.00	20.70	247.00	154.60	56.00	●
21,005	210	21.00 - 21.49	25.40	20.70	247.00	154.60	56.00	●

Holders are always supplied with clamping screw, Guhring no. 4071, and clamping key, Guhring no. 1612

HT 800 WP Interchangeable Insert holders 7 x D

Order no. = Guhring no. + Code-no.

Guhring no.	**4109**
Discount group	**140**

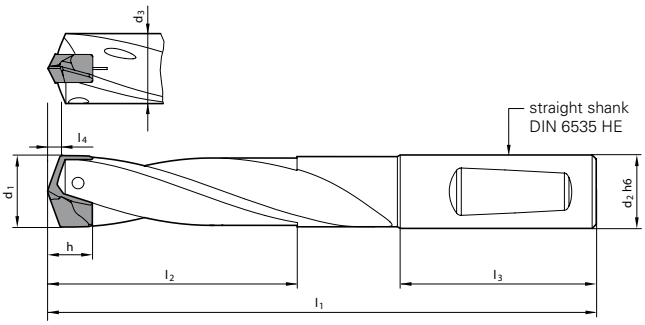

*l1 with drilling insert Guhring no. 4112, 4113 or 4114 only. With pilot insert Guhring no. 4111, see h and l4 dimensions page 8 to 11!

Code no.	Holder size	d1 mm	d2h6 mm	d3 mm	incl. WP l1* mm	l2 max mm	l3 mm	Availability
21,500	215	21.50 - 21.99	25.00	21.20	251.00	158.10	56.00	●
21,505	215	21.50 - 21.99	25.40	21.20	251.00	158.10	56.00	●
22,000	220	22.00 - 22.49	25.00	21.70	255.00	161.70	56.00	●
22,005	220	22.00 - 22.49	25.40	21.70	255.00	161.70	56.00	●
22,500	225	22.50 - 22.99	25.00	22.20	260.00	165.30	56.00	●
22,505	225	22.50 - 22.99	25.40	22.20	260.00	165.30	56.00	●
23,000	230	23.00 - 23.49	25.00	22.70	264.00	168.90	56.00	●
23,005	230	23.00 - 23.49	25.40	22.70	264.00	168.90	56.00	●
23,500	235	23.50 - 23.99	25.00	23.20	269.00	172.50	56.00	●
23,505	235	23.50 - 23.99	25.40	23.20	269.00	172.50	56.00	●
24,000	240	24.00 - 24.49	25.00	23.70	273.00	176.10	56.00	●
24,005	240	24.00 - 24.49	25.40	23.70	273.00	176.10	56.00	●
24,500	245	24.50 - 24.99	25.00	24.20	277.00	179.70	56.00	●
24,505	245	24.50 - 24.99	25.40	24.20	277.00	179.70	56.00	●
25,000	250	25.00 - 25.49	25.00	24.70	282.00	183.30	56.00	●
25,005	250	25.00 - 25.49	25.40	24.70	282.00	183.30	56.00	●
25,500	255	25.50 - 25.99	32.00	25.20	291.00	186.90	60.00	●
25,505	255	25.50 - 25.99	31.75	25.20	291.00	186.90	60.00	●

Holders are always supplied with clamping screw, Guhring no. 4071, and clamping key, Guhring no. 1612.

HT 800 WP Interchangeable Insert Holders 10 x D

Order no. = Guhring no. + Code-no.

Guhring no.	4110
Discount group	140

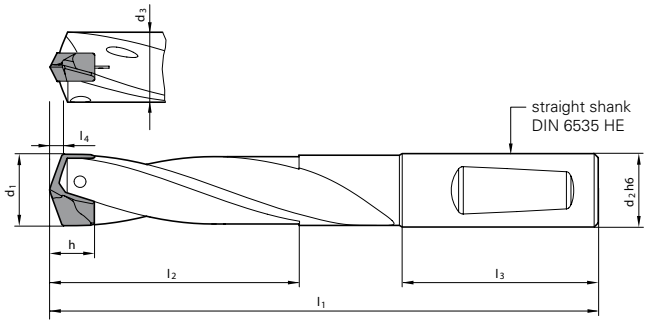

*l1 with drilling insert Guhring no. 4112, 4113 or 4114 only. With pilot insert Guhring no. 4111, see h and l4 dimensions page 8 to 11!

Code no.	Holder size	d1 mm	d2h6 mm	d3 mm	incl. WP l1* mm	l2 max mm	l3 mm	Availability
11,000	110	11.00 - 11.49	12.00	10.70	182.00	117.10	45.00	●
11,005	110	11.00 - 11.49	12.70	10.70	182.00	117.10	45.00	●
11,500	115	11.50 - 11.99	12.00	11.20	187.00	122.10	45.00	●
11,505	115	11.50 - 11.99	12.70	11.20	187.00	122.10	45.00	●
12,000	120	12.00 - 12.49	12.00	11.70	194.00	127.20	45.00	●
12,005	120	12.00 - 12.49	12.70	11.70	194.00	127.20	45.00	●
12,500	125	12.50 - 12.99	14.00	12.20	199.00	132.30	45.00	●
12,505	125	12.50 - 12.99	15.875	12.20	199.00	132.30	45.00	●
13,000	130	13.00 - 13.49	14.00	12.70	205.00	137.50	45.00	●
13,005	130	13.00 - 13.49	15.875	12.70	205.00	137.50	45.00	●
13,500	135	13.50 - 13.99	14.00	13.20	211.00	142.50	45.00	●
13,505	135	13.50 - 13.99	15.875	13.20	211.00	142.50	45.00	●
14,000	140	14.00 - 14.49	14.00	13.70	217.00	147.70	45.00	●
14,005	140	14.00 - 14.49	15.875	13.70	217.00	147.70	45.00	●
14,500	145	14.50 - 14.99	16.00	14.20	225.00	152.80	48.00	●
14,505	145	14.50 - 14.99	15.875	14.20	225.00	152.80	48.00	●
15,000	150	15.00 - 15.49	16.00	14.70	232.00	157.80	48.00	●
15,005	150	15.00 - 15.49	15.875	14.70	232.00	157.80	48.00	●
15,500	155	15.50 - 15.99	16.00	15.20	237.00	162.90	48.00	●
15,505	155	15.50 - 15.99	15.875	15.20	237.00	162.90	48.00	●
16,000	160	16.00 - 16.49	16.00	15.70	243.00	168.00	48.00	●
16,005	160	16.00 - 16.49	15.875	15.70	243.00	168.00	48.00	●
16,500	165	16.50 - 16.99	18.00	16.20	249.00	173.10	48.00	●
16,505	165	16.50 - 16.99	19.05	16.20	249.00	173.10	48.00	●
17,000	170	17.00 - 17.49	18.00	16.70	255.00	178.30	48.00	●
17,005	170	17.00 - 17.49	19.05	16.70	255.00	178.30	48.00	●
17,500	175	17.50 - 17.99	18.00	17.20	260.00	183.50	48.00	●
17,505	175	17.50 - 17.99	19.05	17.20	260.00	183.50	48.00	●
18,000	180	18.00 - 18.49	18.00	17.70	267.00	188.40	48.00	●
18,005	180	18.00 - 18.49	19.05	17.70	267.00	188.40	48.00	●
18,500	185	18.50 - 18.99	20.00	18.20	274.00	193.50	50.00	●
18,505	185	18.50 - 18.99	19.05	18.20	274.00	193.50	50.00	●
19,000	190	19.00 - 19.49	20.00	18.70	280.00	198.70	50.00	●
19,005	190	19.00 - 19.49	19.05	18.70	280.00	198.70	50.00	●
19,500	195	19.50 - 19.99	20.00	19.20	286.00	203.70	50.00	●
19,505	195	19.50 - 19.99	19.05	19.20	286.00	203.70	50.00	●

Holders are always supplied with clamping screw, Guhring no. 4071, and clamping key, Guhring no. 1612

HT 800 WP Interchangeable Insert holders 10 x D

Order no. = Guhring no. + Code-no.

Guhring no.	4110
Discount group	140

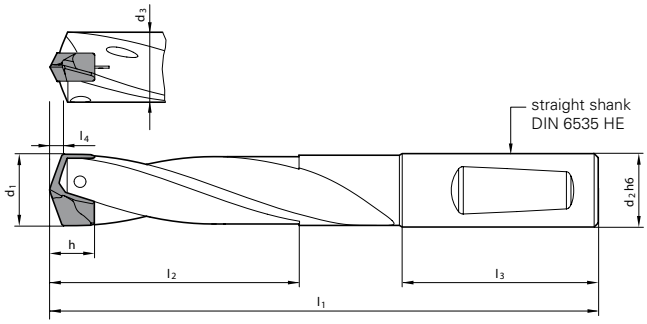

*l1 with drilling insert Guhring no. 4112, 4113 or 4114 only. With pilot insert Guhring no. 4111, see h and l4 dimensions page 8 to 11!

Code no.	Holder size	d1 mm	d2h6 mm	d3 mm	incl. WP l1* mm	l2 max mm	l3 mm	Availability
20,000	200	20.00 - 20.49	20.00	19.70	292.00	208.90	50.00	●
20,005	200	20.00 - 20.49	19.05	19.70	292.00	208.90	50.00	●
20,500	205	20.50 - 20.99	25.00	20.20	306.00	214.00	56.00	●
20,505	205	20.50 - 20.99	25.40	20.20	306.00	214.00	56.00	●
21,000	210	21.00 - 21.49	25.00	20.70	312.00	219.10	56.00	●
21,005	210	21.00 - 21.49	25.40	20.70	312.00	219.10	56.00	●
21,500	215	21.50 - 21.99	25.00	21.20	317.00	224.20	56.00	●
21,505	215	21.50 - 21.99	25.40	21.20	317.00	224.20	56.00	●
22,000	220	22.00 - 22.49	25.00	21.70	323.00	229.30	56.00	●
22,005	220	22.00 - 22.49	25.40	21.70	323.00	229.30	56.00	●
22,500	225	22.50 - 22.99	25.00	22.20	329.00	234.40	56.00	●
22,505	225	22.50 - 22.99	25.40	22.20	329.00	234.40	56.00	●
23,000	230	23.00 - 23.49	25.00	22.70	335.00	239.50	56.00	●
23,005	230	23.00 - 23.49	25.40	22.70	335.00	239.50	56.00	●
23,500	235	23.50 - 23.99	25.00	23.20	341.00	244.60	56.00	●
23,505	235	23.50 - 23.99	25.40	23.20	341.00	244.60	56.00	●
24,000	240	24.00 - 24.49	25.00	23.70	347.00	249.70	56.00	●
24,005	240	24.00 - 24.49	25.40	23.70	347.00	249.70	56.00	●
24,500	245	24.50 - 24.99	25.00	24.20	352.00	254.80	56.00	●
24,505	245	24.50 - 24.99	25.40	24.20	352.00	254.80	56.00	●
25,000	250	25.00 - 25.49	25.00	24.70	359.00	259.90	56.00	●
25,005	250	25.00 - 25.49	25.40	24.70	359.00	259.90	56.00	●
25,500	255	25.50 - 25.99	32.00	25.20	369.00	265.00	60.00	●
25,505	255	25.50 - 25.99	31.75	25.20	369.00	265.00	60.00	●

Holders are always supplied with clamping screw, Guhring no. 4071, and clamping key, Guhring no. 1612.

Clamping screws

Order no. = Guhring no. + Code-no.				Guhring no.	4071
	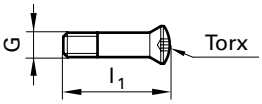			Discount group	140
					
Code no.	Holder size	G	l1 mm	with Torx	**Availability**
2.200	115	M2.2	10.0	T7	●
2.201	120/125	M2.2	11.0	T7	●
2.500	130/135	M2.5	12.0	T8	●
3.000	140/145	M3	12.85	T9	●
3.001	150/155	M3	13.85	T9	●
3.500	160/170	M3.5	15.0	T10	●
4.000	180/190	M4	17.0	T15	●
4.500	200/210	M4.5	19.0	T15	●
5.000	220/230	M5	21.0	T20	●
5.001	240/250	M5	23.0	T20	●

Clamping screws

Order no. = Guhring no. + Code-no.				Guhring no.	6128
	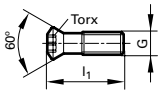			Discount group	122
Code no.	Holder size	G	l1 mm	with Torx	**Availability**
2,000	110 - 140	M2.0	5.5	T6	●
2,500	160 - 240	M2.5	5.3	T7	●

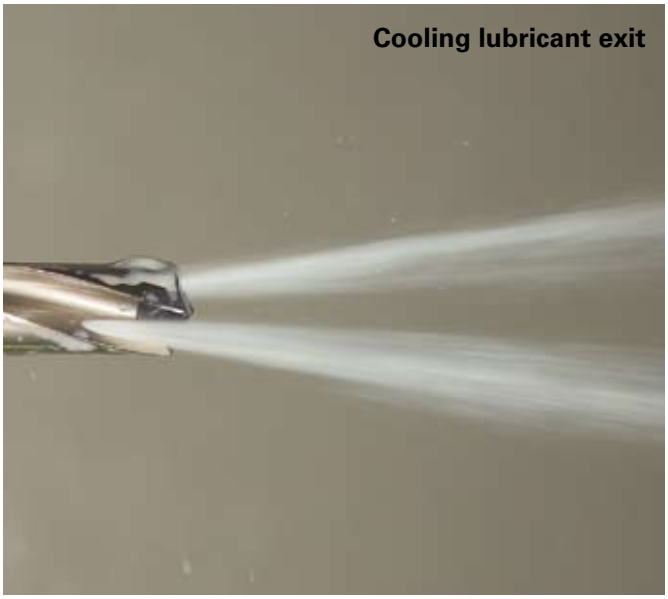

Torque key

Order no. = Guhring no. + Code-no.				Guhring no.	4915
				Discount group	114
Code no.	Type	Drive	l1 mm	Torque Nm	**Availability**
2.000	A	1/4" ⬢	131	0.8-2	●
8.000	A	1/4" ⬢	142	2-8	●

Torx-Bits

Order no. = Guhring no. + Code-no.			Guhring no.	4917
			Discount group	114
				
Code no.	for Torx	Drive	l1 mm	**Availability**
7.000	T7	1/4" ⬢	25	●
8.000	T8	1/4" ⬢	25	●
9.000	T9	1/4" ⬢	25	●
10.000	T10	1/4" ⬢	25	●
15.000	T15	1/4" ⬢	25	●
20.000	T20	1/4" ⬢	25	●

Screwdriver

Order no. = Guhring no. + Code-no.		Guhring no.	1612
		Discount group	140
Code no.	Holder size	for Torx	**Availability**
7.001	115-125	T7	●
8.001	130/135	T8	●
9.001	140-155	T9	●
10.001	160/170	T10	●
15.001	180-210	T15	●
20.001	220-250	T20	●

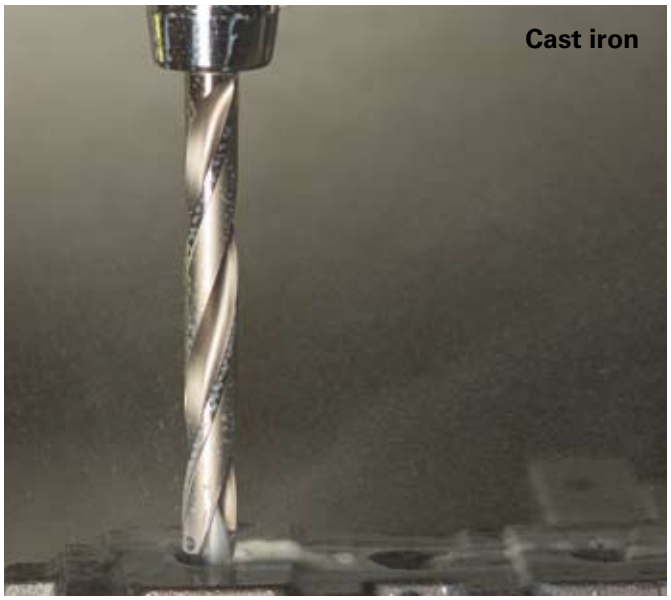

HT 800 WP Application Recommendations

All data are approximate values. The actually achievable cutting speeds and feed rates depend on the respective machining conditions.
We recommend suitable drilling trials.

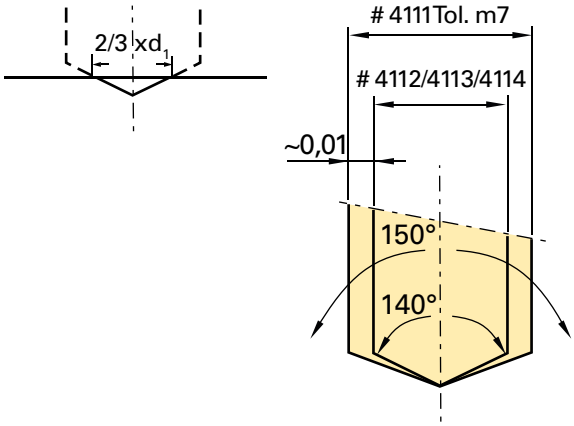

- for through holes supporting lands must remain in permanent contact.
- don't apply drilling tool without trial for interrupted cutting (grooves, transverse holes). For interrupted cutting (max. 0.2 x D) it is recommended to reduce the feed rate whenever possible.
- in contrast to conventional indexable inserts, HT 800 tools are also suitable for the drilling of stacked sheets.
- on a lathe (stationary tool) it must be ensured that the tool is accurately centred.
- pre-condition for optimal machining results is a sufficient cooling lubricant supply with soluble or neat oil.
- the tool is only of limited suitability for dry machining or MQL. For MQL application we recommend the use of the conical MQL shank end as well as Guhring MQL components. Please contact our Sales Management.

Drill-Ø mm	Feed column no.								
	1	2	3	4	5	6	7	8	9
	f (mm/rev.)								
0.50	0.004	0.006	0.007	0.008	0.010	0.012	0.014	0.016	0.019
1.00	0.006	0.008	0.012	0.014	0.016	0.018	0.020	0.023	0.025
2.00	0.020	0.025	0.032	0.040	0.050	0.063	0.080	0.100	0.125
2.50	0.025	0.032	0.040	0.050	0.063	0.080	0.100	0.125	0.160
3.15	0.032	0.040	0.050	0.063	0.080	0.100	0.125	0.160	0.160
4.00	0.040	0.050	0.063	0.080	0.100	0.125	0.160	0.200	0.200
5.00	0.040	0.050	0.063	0.080	0.100	0.125	0.160	0.200	0.250
6.30	0.050	0.063	0.080	0.100	0.125	0.160	0.200	0.250	0.315
8.00	0.063	0.080	0.100	0.125	0.160	0.200	0.250	0.315	0.315
10.00	0.080	0.100	0.125	0.160	0.200	0.250	0.315	0.400	0.400
12.50	0.080	0.100	0.125	0.160	0.200	0.250	0.315	0.400	0.500
16.00	0.100	0.125	0.160	0.200	0.250	0.315	0.400	0.500	0.630
20.00	0.125	0.160	0.200	0.250	0.315	0.400	0.500	0.630	0.630
25.00	0.160	0.200	0.250	0.315	0.400	0.500	0.630	0.800	0.800
31.50	0.160	0.200	0.250	0.315	0.400	0.500	0.630	0.800	1.000

Coolant:
○ air
● neat oil
◍ soluble oil

Material group	Material examples, **new description** (old description in brackets) *Figures in bold = material no. to DIN EN*	Tensile strength MPa (N/mm²)	Hard-ness	Cool-ant
Common structural steels	**1.0035** S185(St33),**1.0486** P275N(StE285),**1.0345** P235GH(H1),**1.0425** P265GH(H2) **1.0050** E295 (St50-2), **1.0070** E360 (St70-2), **1.8937** P500NH (WStE500)	≤500 >500-850		◍ ◍
Free-cutting steels	**1.0718** 11SMnPb30 (9SMnPb28), **1.0736** 11SMn37 (9SMn36) **1.0727** 46S20 (45S20), **1.0728** (60S20), **1.0757** 46SPb20 (45SPb20)	≤850 850-1000		◍ ◍
Unalloyed heat-treatable steels	**1.0402** C22, **1.1178** C30E (Ck30) **1.0503** C45, **1.1191** C45E (Ck45) **1.0601** C60, **1.1221** C60E (Ck60)	≤ 700 700-850 850-1000		◍ ◍ ◍
Alloyed heat-treatable steels	**1.5131** 50MnSi4, **1.7003** 38Cr2, **1.7030** 28Cr4 **1.5710** 36NiCr6, **1.7035** 41Cr4, **1.7225** 42CrMo4	850-≤1000 1000-1200		◍ ◍
Unalloyed case hardened steels	**1.0301** (C10), **1.1121** C10E (Ck10)	≤750		◍
Alloyed case hardened steels	**1.7043** 38Cr4 **1.5752** 15NiCr13 (15NiCr13), **1.7131** 16MnCr5, **1.7264** 20CrMo5	850-≤1000 1000-1200		● ●
Nitriding steels	**1.8504** 34CrAl6 **1.8519** 31CrMoV9, **1.8550** 34CrAlNi7	≥850-≤1000 >1000-1200		◍ ●
Tool steels	**1.1750** C75W, **1.2067** 102Cr6, **1.2307** 29CrMoV9 **1.2080** X210Cr12, **1.2083** X42Cr13, **1.2419** 105WCr6, **1.2767** X45NiCrMo4	≤850 >850-1000		◍ ●
High speed steels	**1.3243** S 6-5-2-5, **1.3343** S 6-5-2, **1.3344** S 6-5-3	≥650-1000		●
Spring steels	**1.5026** 55Si7, **1.7176** 55Cr3, **1.8159** 51CrV4 (51CrV4)		≤330 HB	●
Stainless steels, sulphured austenitic martensitic	**1.4005** X12CrS13, **1.4104** X14CrMoS17, **1.4105** X6CrMoS17, **1.4305** X8CrNiS18-9 **1.4301** X5CrNi18-10 (V2A), **1.4541** X6CrNiTi18-10, **1.4571** X6CrNiMoTi 17-12-2 (V4A) **1.4057** X20CrNi 17 2 (X17CrNi16-2), **1.4122** X39CrMo17-1, **1.4521** X2CrMoTi18-2	≤850 ≤850 ≤850		● ● ●
Hardened steels	–		≤40-48 HRC >48-60 HRC	● ●
Special alloys	Nimonic, Inconel, Monel, Hastelloy	≤1200		●
Cast iron	**0.6010** EN-GJL-100(GG10), **0.6020** EN-GJL-200(GG20) **0.6025** EN-GJL-250(GG25), **0.6035** EN-GJL-350(GG35)		≤240 HB <300 HB	◍○ ◍○
New cast materials CGI	**EN-GJV250 (GGV25)**, **EN-GJV350** (GGV35) **EN-GJV400** (GGV40), **EN-GJV500** (GGV50), SiMo 6		≤220 HB <300 HB	◍○ ◍○
New cast materials ADI	**EN-GJS-800-8** (ADI800), **EN-GJS-1000-5** (ADI1000) **EN-GJS-1200-2** (ADI1200), **EN-GJS-1400-1** (ADI1400)	800-1000 1200-1400		◍○ ◍○
Spheroidal graphite iron and malleable cast iron	**0.7050** EN-GJS-500-7(GGG50), **0.8035** EN-GJMW-350-4(GTW35) **0.7070** EN-GJS-700-2(GGG70), **0.8170** EN-GJMB-700-2(GTS70)		≤240 HB <300 HB	◍ ◍
Chilled cast iron	–		≤350 HB	◍
Ti and Ti-alloys	**3.7024** Ti99,5, **3.7114** TiAl5Sn2,5, **3.7124** TiCu2 **3.7154** TiAl6Zr5, **3.7165** TiAl6V4, **3.7184** TiAl4Mo4Sn2,5, - TiAl8Mo1V1	≤850 >850-1200		● ●
Aluminium and Al-alloys	**3.0255** Al99,5, **3.2315** AlMgSi1, **3.3515** AlMg1	≤400		◍
Al wrought alloys	**3.0615** AlMgSiPb, **3.1325** AlCuMg1, **3.3245** AlMg3Si, **3.4365** AlZnMgCu1,5	≤450		◍
Al cast alloys ≤ 10 % Si > 10 % Si	**3.2131** G-AlSi5Cu1, **3.2153** G-AlSi7Cu3, **3.2573** G-AlSi9 **3.2581** G-AlSi12, **3.2583** G-AlSi12Cu, - G-AlSi12CuNiMg	≤600 ≤600		◍ ◍
Magnesium alloys	**3.5200** MgMn2, **3.5812.05** G-MgAl8Zn1, **3.5612.05** G-MgAl6Zn1	≤450		○
Copper, low-alloyed	**2.0070** SE-Cu, **2.1020** CuSn6, **2.1096** G-CuSn5ZnPb	≤400		◍
Brass, short-chipping long-chipping	**2.0380** CuZn39Pb2, **2.0401** CuZn39Pb3, **2.0410** CuZn43Pb2 **2.0250** CuZn20, **2.0280** CuZn33, **2.0332** CuZn37Pb0,5	≤600 ≤600		◍ ◍
Bronze, short-chipping	**2.1090** CuSn7ZnPb, **2.1170** CuPb5Sn5, **2.1176** CuPb10Sn **2.0790** CuNi18Zn19Pb	≤600 >600-850		◍● ●
Bronze, long-chipping	**2.0916** CuAl5, **2.0960** CuAl9Mn, **2.1050** CuSn10 **2.0980** CuAl11Ni, **2.1247** CuBe2	≤850 >850-1000		● ●

Tool holders ≤ 1×D, Guhring no. 4105 for pilot drilling/countersinking

Guhring no.	4111	4112	4113	4114
Tool material	Solid carbide	Solid carbide	Solid carbide	Solid carbide
Carbide grade	K/P	K/P	K/P	K
Surface finish	nanoA	nanoFIRE	FIRE	bright
Application	pilot drilling/countersinking	steel	cast iron	Al and Al-alloys
				

v_c m/min	Feed column no.	v_c m/min	Feed column no.	v_c m/min	Feed column no.	v_c m/min	Feed column no.
130	6	130	6				
110	5	110	5				
130	7	130	7				
110	6	110	6				
130	6	130	6				
125	6	125	6				
110	5	110	5				
110	6	110	6				
90	5	90	5				
130	7	130	7				
110	6	110	6				
70	4	70	4				
105	5	105	5				
70	4	70	4				
60	5	60	5				
55	4	55	4				
55	3	55	3				
50	2	50	2				
55	3	55	3				
40	3	40	3				
35	3	35	3				
25	2	25	2				
25	2	25	2				
100	6			100	6		
90	6			90	6		
80	5			80	5		
80	5			80	5		
80	5			80	5		
80	5			80	5		
120	7			120	7		
100	6			100	6		
90	6			90	6		
40	3	40	3				
35	2	35	2				
200	7					200	7
180	7					180	7
150	7					150	7
120	7					120	7
180	7					180	7
70	6					70	6
180	7					180	7
120	6					120	6
70	6					70	6
50	6					50	6
45	6					45	6
35	5					35	5

HT 800 WP Application Recommendations

All data are approximate values. The actually achievable cutting speeds and feed rates depend on the respective machining conditions.
We recommend suitable drilling trials.

- for through holes supporting lands must remain in permanent contact.
- don't apply drilling tool without trial for interrupted cutting (grooves, transverse holes). For interrupted cutting (max. 0.2 x D) it is recommended to reduce the feed rate whenever possible.
- in contrast to conventional indexable inserts, HT 800 tools are also suitable for the drilling of stacked sheets.
- on a lathe (stationary tool) it must be ensured that the tool is accurately centred.
- pre-condition for optimal machining results is a sufficient cooling lubricant supply with soluble or neat oil.
- the tool is only of limited suitability for dry machining or MQL. For MQL application we recommend the use of the conical MQL shank end as well as Guhring MQL components. Please contact our Sales Management.

Drill-Ø mm	Feed column no.								
	1	2	3	4	5	6	7	8	9
	f (mm/rev.)								
0.50	0.004	0.006	0.007	0.008	0.010	0.012	0.014	0.016	0.019
1.00	0.006	0.008	0.012	0.014	0.016	0.018	0.020	0.023	0.025
2.00	0.020	0.025	0.032	0.040	0.050	0.063	0.080	0.100	0.125
2.50	0.025	0.032	0.040	0.050	0.063	0.080	0.100	0.125	0.160
3.15	0.032	0.040	0.050	0.063	0.080	0.100	0.125	0.160	0.160
4.00	0.040	0.050	0.063	0.080	0.100	0.125	0.160	0.200	0.200
5.00	0.040	0.050	0.063	0.080	0.100	0.125	0.160	0.200	0.250
6.30	0.050	0.063	0.080	0.100	0.125	0.160	0.200	0.250	0.315
8.00	0.063	0.080	0.100	0.125	0.160	0.200	0.250	0.315	0.315
10.00	0.080	0.100	0.125	0.160	0.200	0.250	0.315	0.400	0.400
12.50	0.080	0.100	0.125	0.160	0.200	0.250	0.315	0.400	0.500
16.00	0.100	0.125	0.160	0.200	0.250	0.315	0.400	0.500	0.630
20.00	0.125	0.160	0.200	0.250	0.315	0.400	0.500	0.630	0.630
25.00	0.160	0.200	0.250	0.315	0.400	0.500	0.630	0.800	0.800
31.50	0.160	0.200	0.250	0.315	0.400	0.500	0.630	0.800	1.000

Coolant:
○ air
● neat oil
◍ soluble oil

Material group	Material examples, **new description** (old description in brackets) *Figures in bold = material no. to DIN EN*	Tensile strength MPa (N/mm²)	Hardness	Coolant
Common structural steels	**1.0035** S185(St33),**1.0486** P275N(StE285),**1.0345** P235GH(H1),**1.0425** P265GH(H2)	≤500		◍
	1.0050 E295 (St50-2), **1.0070** E360 (St70-2), **1.8937** P500NH (WStE500)	>500-850		◍
Free-cutting steels	**1.0718** 11SMnPb30 (9SMnPb28), **1.0736** 11SMn37 (9SMn36)	≤850		◍
	1.0727 46S20 (45S20), **1.0728** (60S20), **1.0757** 46SPb20 (45SPb20)	850-1000		◍
Unalloyed heat-treatable steels	**1.0402** C22, **1.1178** C30E (Ck30)	≤ 700		◍
	1.0503 C45, **1.1191** C45E (Ck45)	700-850		◍
	1.0601 C60, **1.1221** C60E (Ck60)	850-1000		◍
Alloyed heat-treatable steels	**1.5131** 50MnSi4, **1.7003** 38Cr2, **1.7030** 28Cr4	850-≤1000		◍
	1.5710 36NiCr6, **1.7035** 41Cr4, **1.7225** 42CrMo4	1000-1200		◍
Unalloyed case hardened steels	**1.0301** (C10), **1.1121** C10E (Ck10)	≤750		◍
Alloyed case hardened steels	**1.7043** 38Cr4	850-≤1000		●
	1.5752 15NiCr13 (15NiCr13), **1.7131** 16MnCr5, **1.7264** 20CrMo5	1000-1200		●
Nitriding steels	**1.8504** 34CrAl6	≥850-≤1000		◍
	1.8519 31CrMoV9, **1.8550** 34CrAlNi7	>1000-1200		●
Tool steels	**1.1750** C75W, **1.2067** 102Cr6, **1.2307** 29CrMoV9	≤850		◍
	1.2080 X210Cr12, **1.2083** X42Cr13, **1.2419** 105WCr6, **1.2767** X45NiCrMo4	>850-1000		●
High speed steels	**1.3243** S 6-5-2-5, **1.3343** S 6-5-2, **1.3344** S 6-5-3	≥650-1000		●
Spring steels	**1.5026** 55Si7, **1.7176** 55Cr3, **1.8159** 51CrV4 (51CrV4)		≤330 HB	●
Stainless steels, sulphured	**1.4005** X12CrS13, **1.4104** X14CrMoS17, **1.4105** X6CrMoS17, **1.4305** X8CrNiS18-9	≤850		●
austenitic	**1.4301** X5CrNi18-10 (V2A), **1.4541** X6CrNiTi18-10, **1.4571** X6CrNiMoTi 17-12-2 (V4A)	≤850		●
martensitic	**1.4057** X20CrNi 17 2 (X17CrNi16-2), **1.4122** X39CrMo17-1, **1.4521** X2CrMoTi18-2	≤850		●
Hardened steels	–		≤40-48 HRC	●
			>48-60 HRC	●
Special alloys	Nimonic, Inconel, Monel, Hastelloy	≤1200		●
Cast iron	**0.6010** EN-GJL-100(GG10), **0.6020** EN-GJL-200(GG20)		≤240 HB	◍ ○
	0.6025 EN-GJL-250(GG25), **0.6035** EN-GJL-350(GG35)		<300 HB	◍ ○
New cast materials CGI	**EN-GJV250 (GGV25)**, **EN-GJV350** (GGV35)		≤220 HB	◍ ○
	EN-GJV400 (GGV40), **EN-GJV500** (GGV50), SiMo 6		<300 HB	◍ ○
New cast materials ADI	**EN-GJS-800-8** (ADI800), **EN-GJS-1000-5** (ADI1000)	800-1000		◍ ○
	EN-GJS-1200-2 (ADI1200), **EN-GJS-1400-1** (ADI1400)	1200-1400		◍ ○
Spheroidal graphite iron and malleable cast iron	**0.7050** EN-GJS-500-7(GGG50), **0.8035** EN-GJMW-350-4(GTW35)		≤240 HB	◍
	0.7070 EN-GJS-700-2(GGG70), **0.8170** EN-GJMB-700-2(GTS70)		<300 HB	◍
Chilled cast iron	–		≤350 HB	◍
Ti and Ti-alloys	**3.7024** Ti99,5, **3.7114** TiAl5Sn2,5, **3.7124** TiCu2	≤850		●
	3.7154 TiAl6Zr5, **3.7165** TiAl6V4, **3.7184** TiAl4Mo4Sn2,5, - TiAl8Mo1V1	>850-1200		●
Aluminium and Al-alloys	**3.0255** Al99,5, **3.2315** AlMgSi1, **3.3515** AlMg1	≤400		◍
Al wrought alloys	**3.0615** AlMgSiPb, **3.1325** AlCuMg1, **3.3245** AlMg3Si, **3.4365** AlZnMgCu1,5	≤450		◍
Al cast alloys ≤ 10 % Si	**3.2131** G-AlSi5Cu1, **3.2153** G-AlSi7Cu3, **3.2573** G-AlSi9	≤600		◍
> 10 % Si	**3.2581** G-AlSi12, **3.2583** G-AlSi12Cu, - G-AlSi12CuNiMg	≤600		◍
Magnesium alloys	**3.5200** MgMn2, **3.5812.05** G-MgAl8Zn1, **3.5612.05** G-MgAl6Zn1	≤450		○
Copper, low-alloyed	**2.0070** SE-Cu, **2.1020** CuSn6, **2.1096** G-CuSn5ZnPb	≤400		◍
Brass, short-chipping	**2.0380** CuZn39Pb2, **2.0401** CuZn39Pb3, **2.0410** CuZn43Pb2	≤600		◍
long-chipping	**2.0250** CuZn20, **2.0280** CuZn33, **2.0332** CuZn37Pb0,5	≤600		◍
Bronze, short-chipping	**2.1090** CuSn7ZnPb, **2.1170** CuPb5Sn5, **2.1176** CuPb10Sn	≤600		◍ ●
	2.0790 CuNi18Zn19Pb	>600-850		●
Bronze, long-chipping	**2.0916** CuAl5, **2.0960** CuAl9Mn, **2.1050** CuSn10	≤850		●
	2.0980 CuAl11Ni, **2.1247** CuBe2	>850-1000		●

Tool holders

≤ 1.5×D, Guhring no. 4106

≤ 3×D, Guhring no. 4107

Guhring no.	4112
Tool material	Solid carbide
Carbide grade	K/P
Surface finish	nanoFIRE
Application	steel

v_c m/min	Feed column no.
130	6
110	5
130	7
110	6
130	6
125	6
110	5
110	6
90	5
130	7
110	6
70	4
105	5
70	4
60	5
55	4
55	3
50	2
55	3
40	3
35	3
25	2
25	2
40	3
35	2

Guhring no.	4113
Tool material	Solid carbide
Carbide grade	K/P
Surface finish	FIRE
Application	cast iron

v_c m/min	Feed column no.
100	6
90	6
80	5
80	5
80	5
80	5
120	7
100	6
90	6

Guhring no.	4114
Tool material	Solid carbide
Carbide grade	K
Surface finish	bright
Application	Al and Al-alloys

v_c m/min	Feed column no.
200	7
180	7
150	7
120	7
180	7
70	6
180	7
120	6
70	6
50	6
45	6
35	5

HT 800 WP Application Recommendations

All data are approximate values. The actually achievable cutting speeds and feed rates depend on the respective machining conditions.
We recommend suitable drilling trials.

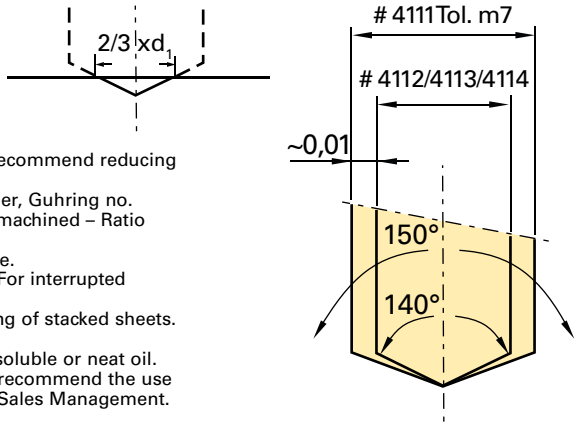

- for through holes supporting lands must remain in permanent contact. In addition, we recommend reducing the feed rate prior to exiting.
- for drilling depths from 5xD we generally recommend centring or pilot drilling with holder, Guhring no. 4105, and pilot insert, Guhring no. 4111. Alternatively – depending on the material to be machined – Ratio drills type RT 100 U or RT 100VA can be applied.
- for drilling without centring we recommend reducing the feed rate at the start of the hole.
- don't apply drilling tool without trial for interrupted cutting (grooves, transverse holes). For interrupted cutting (max. 0.2 x D) it is recommended to reduce the feed rate whenever possible.
- in contrast to conventional indexable inserts, HT 800 tools are also suitable for the drilling of stacked sheets.
- on a lathe (stationary tool) it must be ensured that the tool is accurately centred.
- pre-condition for optimal machining results is a sufficient cooling lubricant supply with soluble or neat oil.
- the tool is only of limited suitability for dry machining or MQL. For MQL application we recommend the use of the conical MQL shank end as well as Guhring MQL components. Please contact our Sales Management.

Drill-Ø mm	Feed column no.								
	1	2	3	4	5	6	7	8	9
	f (mm/rev.)								
0.50	0.004	0.006	0.007	0.008	0.010	0.012	0.014	0.016	0.019
1.00	0.006	0.008	0.012	0.014	0.016	0.018	0.020	0.023	0.025
2.00	0.020	0.025	0.032	0.040	0.050	0.063	0.080	0.100	0.125
2.50	0.025	0.032	0.040	0.050	0.063	0.080	0.100	0.125	0.160
3.15	0.032	0.040	0.050	0.063	0.080	0.100	0.125	0.160	0.160
4.00	0.040	0.050	0.063	0.080	0.100	0.125	0.160	0.200	0.200
5.00	0.040	0.050	0.063	0.080	0.100	0.125	0.160	0.200	0.250
6.30	0.050	0.063	0.080	0.100	0.125	0.160	0.200	0.250	0.315
8.00	0.063	0.080	0.100	0.125	0.160	0.200	0.250	0.315	0.315
10.00	0.080	0.100	0.125	0.160	0.200	0.250	0.315	0.400	0.400
12.50	0.080	0.100	0.125	0.160	0.200	0.250	0.315	0.400	0.500
16.00	0.100	0.125	0.160	0.200	0.250	0.315	0.400	0.500	0.630
20.00	0.125	0.160	0.200	0.250	0.315	0.400	0.500	0.630	0.630
25.00	0.160	0.200	0.250	0.315	0.400	0.500	0.630	0.800	0.800
31.50	0.160	0.200	0.250	0.315	0.400	0.500	0.630	0.800	1.000

Coolant:
○ air
● neat oil
◍ soluble oil

Material group	Material examples, **new description** (old description in brackets) *Figures in bold = material no. to DIN EN*	Tensile strength MPa (N/mm²)	Hardness	Coolant
Common structural steels	**1.0035** S185(St33),**1.0486** P275N(StE285),**1.0345** P235GH(H1),**1.0425** P265GH(H2) **1.0050** E295 (St50-2), **1.0070** E360 (St70-2), **1.8937** P500NH (WStE500)	≤500 >500-850		◍ ◍
Free-cutting steels	**1.0718** 11SMnPb30 (9SMnPb28), **1.0736** 11SMn37 (9SMn36) **1.0727** 46S20 (45S20), **1.0728** (60S20), **1.0757** 46SPb20 (45SPb20)	≤850 850-1000		◍ ◍
Unalloyed heat-treatable steels	**1.0402** C22, **1.1178** C30E (Ck30) **1.0503** C45, **1.1191** C45E (Ck45) **1.0601** C60, **1.1221** C60E (Ck60)	≤ 700 700-850 850-1000		◍ ◍ ◍
Alloyed heat-treatable steels	**1.5131** 50MnSi4, **1.7003** 38Cr2, **1.7030** 28Cr4 **1.5710** 36NiCr6, **1.7035** 41Cr4, **1.7225** 42CrMo4	850-≤1000 1000-1200		◍ ◍
Unalloyed case hardened steels	**1.0301** (C10), **1.1121** C10E (Ck10)	≤750		◍
Alloyed case hardened steels	**1.7043** 38Cr4 **1.5752** 15NiCr13 (15NiCr13), **1.7131** 16MnCr5, **1.7264** 20CrMo5	850-≤1000 1000-1200		● ●
Nitriding steels	**1.8504** 34CrAl6 **1.8519** 31CrMoV9, **1.8550** 34CrAlNi7	≥850-≤1000 >1000-1200		◍ ●
Tool steels	**1.1750** C75W, **1.2067** 102Cr6, **1.2307** 29CrMoV9 **1.2080** X210Cr12, **1.2083** X42Cr13, **1.2419** 105WCr6, **1.2767** X45NiCrMo4	≤850 >850-1000		◍ ●
High speed steels	**1.3243** S 6-5-2-5, **1.3343** S 6-5-2, **1.3344** S 6-5-3	≥650-1000		●
Spring steels	**1.5026** 55Si7, **1.7176** 55Cr3, **1.8159** 51CrV4 (51CrV4)		≤330 HB	●
Stainless steels, sulphured austenitic martensitic	**1.4005** X12CrS13, **1.4104** X14CrMoS17, **1.4105** X6CrMoS17, **1.4305** X8CrNiS18-9 **1.4301** X5CrNi18-10 (V2A), **1.4541** X6CrNiTi18-10, **1.4571** X6CrNiMoTi 17-12-2 (V4A) **1.4057** X20CrNi 17 2 (X17CrNi16-2), **1.4122** X39CrMo17-1, **1.4521** X2CrMoTi18-2	≤850 ≤850 ≤850		● ● ●
Hardened steels	–		≤40-48 HRC >48-60 HRC	● ●
Special alloys	Nimonic, Inconel, Monel, Hastelloy	≤1200		●
Cast iron	**0.6010** EN-GJL-100(GG10), **0.6020** EN-GJL-200(GG20) **0.6025** EN-GJL-250(GG25), **0.6035** EN-GJL-350(GG35)		≤240 HB <300 HB	◍○ ◍○
New cast materials CGI	**EN-GJV250 (GGV25)**, **EN-GJV350** (GGV35) **EN-GJV400** (GGV40), **EN-GJV500** (GGV50), SiMo 6		≤220 HB <300 HB	◍○ ◍○
New cast materials ADI	**EN-GJS-800-8** (ADI800), **EN-GJS-1000-5** (ADI1000) **EN-GJS-1200-2** (ADI1200), **EN-GJS-1400-1** (ADI1400)	800-1000 1200-1400		◍○ ◍○
Spheroidal graphite iron and malleable cast iron	**0.7050** EN-GJS-500-7(GGG50), **0.8035** EN-GJMW-350-4(GTW35) **0.7070** EN-GJS-700-2(GGG70), **0.8170** EN-GJMB-700-2(GTS70)		≤240 HB <300 HB	◍ ◍
Chilled cast iron	–		≤350 HB	◍
Ti and Ti-alloys	**3.7024** Ti99,5, **3.7114** TiAl5Sn2,5, **3.7124** TiCu2 **3.7154** TiAl6Zr5, **3.7165** TiAl6V4, **3.7184** TiAl4Mo4Sn2,5, - TiAl8Mo1V1	≤850 >850-1200		● ●
Aluminium and Al-alloys	**3.0255** Al99,5, **3.2315** AlMgSi1, **3.3515** AlMg1	≤400		◍
Al wrought alloys	**3.0615** AlMgSiPb, **3.1325** AlCuMg1, **3.3245** AlMg3Si, **3.4365** AlZnMgCu1,5	≤450		◍
Al cast alloys ≤ 10 % Si > 10 % Si	**3.2131** G-AlSi5Cu1, **3.2153** G-AlSi7Cu3, **3.2573** G-AlSi9 **3.2581** G-AlSi12, **3.2583** G-AlSi12Cu, - G-AlSi12CuNiMg	≤600 ≤600		◍ ◍
Magnesium alloys	**3.5200** MgMn2, **3.5812.05** G-MgAl8Zn1, **3.5612.05** G-MgAl6Zn1	≤450		○
Copper, low-alloyed	**2.0070** SE-Cu, **2.1020** CuSn6, **2.1096** G-CuSn5ZnPb	≤400		◍
Brass, short-chipping long-chipping	**2.0380** CuZn39Pb2, **2.0401** CuZn39Pb3, **2.0410** CuZn43Pb2 **2.0250** CuZn20, **2.0280** CuZn33, **2.0332** CuZn37Pb0,5	≤600 ≤600		◍ ◍
Bronze, short-chipping	**2.1090** CuSn7ZnPb, **2.1170** CuPb5Sn5, **2.1176** CuPb10Sn **2.0790** CuNi18Zn19Pb	≤600 >600-850		◍● ●
Bronze, long-chipping	**2.0916** CuAl5, **2.0960** CuAl9Mn, **2.1050** CuSn10 **2.0980** CuAl11Ni, **2.1247** CuBe2	≤850 >850-1000		● ●

Tool holders ≤ 5×D, Guhring no. 4108

Guhring no.	4112
Tool material	Solid carbide
Carbide grade	K/P
Surface finish	nanoFIRE
Application	steel

v_c m/min	Feed column no.
125	6
105	5
125	7
105	6
125	6
120	6
105	5
105	6
85	5
125	7
105	6
70	4
105	5
70	4
55	5
50	4
55	3
50	2
55	3
40	3
35	3
25	2
25	2
40	3
35	2

Guhring no.	4113
Tool material	Solid carbide
Carbide grade	K/P
Surface finish	FIRE
Application	cast iron

v_c m/min	Feed column no.
100	6
90	6
80	5
80	5
80	5
80	5
120	7
100	6
90	6

Guhring no.	4114
Tool material	Solid carbide
Carbide grade	K
Surface finish	bright
Application	Al and Al-alloys

v_c m/min	Feed column no.
180	7
180	7
140	7
110	7
180	7
70	6
180	7
120	6
70	6
50	6
45	6
35	5

HT 800 WP Application Recommendations

All data are approximate values. The actually achievable cutting speeds and feed rates depend on the respective machining conditions.
We recommend suitable drilling trials.

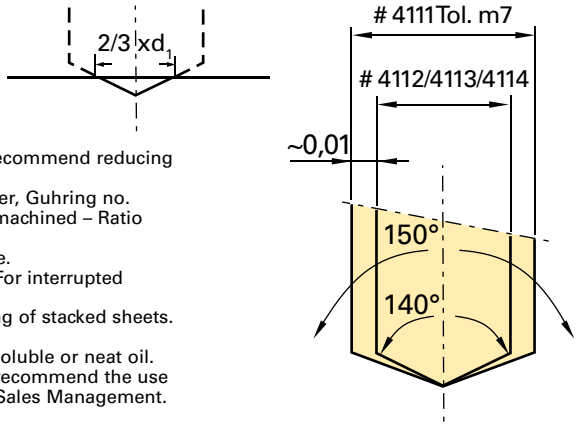

- for through holes supporting lands must remain in permanent contact. In addition, we recommend reducing the feed rate prior to exiting.
- for drilling depths from 5xD we generally recommend centring or pilot drilling with holder, Guhring no. 4105, and pilot insert, Guhring no. 4111. Alternatively – depending on the material to be machined – Ratio drills type RT 100 U or RT 100VA can be applied.
- for drilling without centring we recommend reducing the feed rate at the start of the hole.
- don't apply drilling tool without trial for interrupted cutting (grooves, transverse holes). For interrupted cutting (max. 0.2 x D) it is recommended to reduce the feed rate whenever possible.
- in contrast to conventional indexable inserts, HT 800 tools are also suitable for the drilling of stacked sheets.
- on a lathe (stationary tool) it must be ensured that the tool is accurately centred.
- pre-condition for optimal machining results is a sufficient cooling lubricant supply with soluble or neat oil.
- the tool is only of limited suitability for dry machining or MQL. For MQL application we recommend the use of the conical MQL shank end as well as Guhring MQL components. Please contact our Sales Management.

Drill-Ø mm	Feed column no. 1	2	3	4	5	6	7	8	9
	f (mm/rev.)								
0.50	0.004	0.006	0.007	0.008	0.010	0.012	0.014	0.016	0.019
1.00	0.006	0.008	0.012	0.014	0.016	0.018	0.020	0.023	0.025
2.00	0.020	0.025	0.032	0.040	0.050	0.063	0.080	0.100	0.125
2.50	0.025	0.032	0.040	0.050	0.063	0.080	0.100	0.125	0.160
3.15	0.032	0.040	0.050	0.063	0.080	0.100	0.125	0.160	0.160
4.00	0.040	0.050	0.063	0.080	0.100	0.125	0.160	0.200	0.200
5.00	0.040	0.050	0.063	0.080	0.100	0.125	0.160	0.200	0.250
6.30	0.050	0.063	0.080	0.100	0.125	0.160	0.200	0.250	0.315
8.00	0.063	0.080	0.100	0.125	0.160	0.200	0.250	0.315	0.315
10.00	0.080	0.100	0.125	0.160	0.200	0.250	0.315	0.400	0.400
12.50	0.080	0.100	0.125	0.160	0.200	0.250	0.315	0.400	0.500
16.00	0.100	0.125	0.160	0.200	0.250	0.315	0.400	0.500	0.630
20.00	0.125	0.160	0.200	0.250	0.315	0.400	0.500	0.630	0.630
25.00	0.160	0.200	0.250	0.315	0.400	0.500	0.630	0.800	0.800
31.50	0.160	0.200	0.250	0.315	0.400	0.500	0.630	0.800	1.000

Coolant:
○ air
● neat oil
◍ soluble oil

Material group	Material examples, **new description** (old description in brackets) *Figures in bold = material no. to DIN EN*	Tensile strength MPa (N/mm²)	Hardness	Coolant
Common structural steels	**1.0035** S185(St33),**1.0486** P275N(StE285),**1.0345** P235GH(H1),**1.0425** P265GH(H2) **1.0050** E295 (St50-2), **1.0070** E360 (St70-2), **1.8937** P500NH (WStE500)	≤500 >500-850		◍ ◍
Free-cutting steels	**1.0718** 11SMnPb30 (9SMnPb28), **1.0736** 11SMn37 (9SMn36) **1.0727** 46S20 (45S20), **1.0728** (60S20), **1.0757** 46SPb20 (45SPb20)	≤850 850-1000		◍ ◍
Unalloyed heat-treatable steels	**1.0402** C22, **1.1178** C30E (Ck30) **1.0503** C45, **1.1191** C45E (Ck45) **1.0601** C60, **1.1221** C60E (Ck60)	≤ 700 700-850 850-1000		◍ ◍ ◍
Alloyed heat-treatable steels	**1.5131** 50MnSi4, **1.7003** 38Cr2, **1.7030** 28Cr4 **1.5710** 36NiCr6, **1.7035** 41Cr4, **1.7225** 42CrMo4	850-≤1000 1000-1200		◍ ◍
Unalloyed case hardened steels	**1.0301** (C10), **1.1121** C10E (Ck10)	≤750		◍
Alloyed case hardened steels	**1.7043** 38Cr4 **1.5752** 15NiCr13 (15NiCr13), **1.7131** 16MnCr5, **1.7264** 20CrMo5	850-≤1000 1000-1200		● ●
Nitriding steels	**1.8504** 34CrAl6 **1.8519** 31CrMoV9, **1.8550** 34CrAlNi7	≥850-≤1000 >1000-1200		◍ ●
Tool steels	**1.1750** C75W, **1.2067** 102Cr6, **1.2307** 29CrMoV9 **1.2080** X210Cr12, **1.2083** X42Cr13, **1.2419** 105WCr6, **1.2767** X45NiCrMo4	≤850 >850-1000		◍ ●
High speed steels	**1.3243** S 6-5-2-5, **1.3343** S 6-5-2, **1.3344** S 6-5-3	≥650-1000		●
Spring steels	**1.5026** 55Si7, **1.7176** 55Cr3, **1.8159** 51CrV4 (51CrV4)		≤330 HB	●
Stainless steels, sulphured austenitic martensitic	**1.4005** X12CrS13, **1.4104** X14CrMoS17, **1.4105** X6CrMoS17, **1.4305** X8CrNiS18-9 **1.4301** X5CrNi18-10 (V2A), **1.4541** X6CrNiTi18-10, **1.4571** X6CrNiMoTi 17-12-2 (V4A) **1.4057** X20CrNi 17 2 (X17CrNi16-2), **1.4122** X39CrMo17-1, **1.4521** X2CrMoTi18-2	≤850 ≤850 ≤850		● ● ●
Hardened steels	–		≤40-48 HRC >48-60 HRC	● ●
Special alloys	Nimonic, Inconel, Monel, Hastelloy	≤1200		●
Cast iron	**0.6010** EN-GJL-100(GG10), **0.6020** EN-GJL-200(GG20) **0.6025** EN-GJL-250(GG25), **0.6035** EN-GJL-350(GG35)		≤240 HB <300 HB	◍○ ◍○
New cast materials CGI	**EN-GJV250 (GGV25)**, **EN-GJV350** (GGV35) **EN-GJV400** (GGV40), **EN-GJV500** (GGV50), SiMo 6		≤220 HB <300 HB	◍○ ◍○
New cast materials ADI	**EN-GJS-800-8** (ADI800), **EN-GJS-1000-5** (ADI1000) **EN-GJS-1200-2** (ADI1200), **EN-GJS-1400-1** (ADI1400)	800-1000 1200-1400		◍○ ◍○
Spheroidal graphite iron and malleable cast iron	**0.7050** EN-GJS-500-7(GGG50), **0.8035** EN-GJMW-350-4(GTW35) **0.7070** EN-GJS-700-2(GGG70), **0.8170** EN-GJMB-700-2(GTS70)		≤240 HB <300 HB	◍ ◍
Chilled cast iron	–		≤350 HB	◍
Ti and Ti-alloys	**3.7024** Ti99,5, **3.7114** TiAl5Sn2,5, **3.7124** TiCu2 **3.7154** TiAl6Zr5, **3.7165** TiAl6V4, **3.7184** TiAl4Mo4Sn2,5, - TiAl8Mo1V1	≤850 >850-1200		● ●
Aluminium and Al-alloys	**3.0255** Al99,5, **3.2315** AlMgSi1, **3.3515** AlMg1	≤400		◍
Al wrought alloys	**3.0615** AlMgSiPb, **3.1325** AlCuMg1, **3.3245** AlMg3Si, **3.4365** AlZnMgCu1,5	≤450		◍
Al cast alloys ≤ 10 % Si > 10 % Si	**3.2131** G-AlSi5Cu1, **3.2153** G-AlSi7Cu3, **3.2573** G-AlSi9 **3.2581** G-AlSi12, **3.2583** G-AlSi12Cu, - G-AlSi12CuNiMg	≤600 ≤600		◍ ◍
Magnesium alloys	**3.5200** MgMn2, **3.5812.05** G-MgAl8Zn1, **3.5612.05** G-MgAl6Zn1	≤450		○
Copper, low-alloyed	**2.0070** SE-Cu, **2.1020** CuSn6, **2.1096** G-CuSn5ZnPb	≤400		◍
Brass, short-chipping long-chipping	**2.0380** CuZn39Pb2, **2.0401** CuZn39Pb3, **2.0410** CuZn43Pb2 **2.0250** CuZn20, **2.0280** CuZn33, **2.0332** CuZn37Pb0,5	≤600 ≤600		◍ ◍
Bronze, short-chipping	**2.1090** CuSn7ZnPb, **2.1170** CuPb5Sn5, **2.1176** CuPb10Sn **2.0790** CuNi18Zn19Pb	≤600 >600-850		◍● ●
Bronze, long-chipping	**2.0916** CuAl5, **2.0960** CuAl9Mn, **2.1050** CuSn10 **2.0980** CuAl11Ni, **2.1247** CuBe2	≤850 >850-1000		● ●

Tool holders ≤ 7×D, Guhring no. 4109

Guhring no.	4112
Tool material	Solid carbide
Carbide grade	K/P
Surface finish	nanoFIRE
Application	steel

v_c m/min	Feed column no.
120	5
105	4
120	6
105	5
120	5
110	5
100	4
100	5
85	4
120	6
100	5
70	4
105	4
70	3
55	4
50	3
55	2
50	2
55	2
40	2
35	2
25	1
25	1
40	2
35	1

Guhring no.	4113
Tool material	Solid carbide
Carbide grade	K/P
Surface finish	FIRE
Application	cast iron

v_c m/min	Feed column no.
80	6
70	6
60	5
60	5
60	5
60	5
100	7
80	6
70	6

Guhring no.	4114
Tool material	Solid carbide
Carbide grade	K
Surface finish	bright
Application	Al and Al-alloys

v_c m/min	Feed column no.
180	6
180	6
140	6
110	6
180	6
70	5
180	6
120	5
70	5
50	5
45	5
35	4

HT 800 WP Application Recommendations

All data are approximate values. The actually achievable cutting speeds and feed rates depend on the respective machining conditions.
We recommend suitable drilling trials.

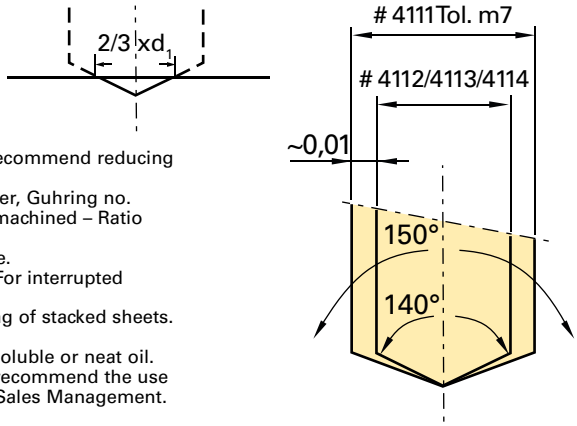

- for through holes supporting lands must remain in permanent contact. In addition, we recommend reducing the feed rate prior to exiting.
- for drilling depths from 5xD we generally recommend centring or pilot drilling with holder, Guhring no. 4105, and pilot insert, Guhring no. 4111. Alternatively – depending on the material to be machined – Ratio drills type RT 100 U or RT 100VA can be applied.
- for drilling without centring we recommend reducing the feed rate at the start of the hole.
- don't apply drilling tool without trial for interrupted cutting (grooves, transverse holes). For interrupted cutting (max. 0.2 x D) it is recommended to reduce the feed rate whenever possible.
- in contrast to conventional indexable inserts, HT 800 tools are also suitable for the drilling of stacked sheets.
- on a lathe (stationary tool) it must be ensured that the tool is accurately centred.
- pre-condition for optimal machining results is a sufficient cooling lubricant supply with soluble or neat oil.
- the tool is only of limited suitability for dry machining or MQL. For MQL application we recommend the use of the conical MQL shank end as well as Guhring MQL components. Please contact our Sales Management.

Drill-Ø mm	Feed column no. 1	2	3	4	5	6	7	8	9
	f (mm/rev.)								
0.50	0.004	0.006	0.007	0.008	0.010	0.012	0.014	0.016	0.019
1.00	0.006	0.008	0.012	0.014	0.016	0.018	0.020	0.023	0.025
2.00	0.020	0.025	0.032	0.040	0.050	0.063	0.080	0.100	0.125
2.50	0.025	0.032	0.040	0.050	0.063	0.080	0.100	0.125	0.160
3.15	0.032	0.040	0.050	0.063	0.080	0.100	0.125	0.160	0.160
4.00	0.040	0.050	0.063	0.080	0.100	0.125	0.160	0.200	0.200
5.00	0.040	0.050	0.063	0.080	0.100	0.125	0.160	0.200	0.250
6.30	0.050	0.063	0.080	0.100	0.125	0.160	0.200	0.250	0.315
8.00	0.063	0.080	0.100	0.125	0.160	0.200	0.250	0.315	0.315
10.00	0.080	0.100	0.125	0.160	0.200	0.250	0.315	0.400	0.400
12.50	0.080	0.100	0.125	0.160	0.200	0.250	0.315	0.400	0.500
16.00	0.100	0.125	0.160	0.200	0.250	0.315	0.400	0.500	0.630
20.00	0.125	0.160	0.200	0.250	0.315	0.400	0.500	0.630	0.630
25.00	0.160	0.200	0.250	0.315	0.400	0.500	0.630	0.800	0.800
31.50	0.160	0.200	0.250	0.315	0.400	0.500	0.630	0.800	1.000

Coolant:
○ air
● neat oil
◍ soluble oil

Material group	Material examples, **new description** (old description in brackets) *Figures in bold = material no. to DIN EN*	Tensile strength MPa (N/mm²)	Hardness	Coolant
Common structural steels	**1.0035** S185(St33),**1.0486** P275N(StE285),**1.0345** P235GH(H1),**1.0425** P265GH(H2) **1.0050** E295 (St50-2), **1.0070** E360 (St70-2), **1.8937** P500NH (WStE500)	≤500 >500-850		◍ ◍
Free-cutting steels	**1.0718** 11SMnPb30 (9SMnPb28), **1.0736** 11SMn37 (9SMn36) **1.0727** 46S20 (45S20), **1.0728** (60S20), **1.0757** 46SPb20 (45SPb20)	≤850 850-1000		◍ ◍
Unalloyed heat-treatable steels	**1.0402** C22, **1.1178** C30E (Ck30) **1.0503** C45, **1.1191** C45E (Ck45) **1.0601** C60, **1.1221** C60E (Ck60)	≤ 700 700-850 850-1000		◍ ◍ ◍
Alloyed heat-treatable steels	**1.5131** 50MnSi4, **1.7003** 38Cr2, **1.7030** 28Cr4 **1.5710** 36NiCr6, **1.7035** 41Cr4, **1.7225** 42CrMo4	850-≤1000 1000-1200		◍ ◍
Unalloyed case hardened steels	**1.0301** (C10), **1.1121** C10E (Ck10)	≤750		◍
Alloyed case hardened steels	**1.7043** 38Cr4 **1.5752** 15NiCr13 (15NiCr13), **1.7131** 16MnCr5, **1.7264** 20CrMo5	850-≤1000 1000-1200		● ●
Nitriding steels	**1.8504** 34CrAl6 **1.8519** 31CrMoV9, **1.8550** 34CrAlNi7	≥850-≤1000 >1000-1200		◍ ●
Tool steels	**1.1750** C75W, **1.2067** 102Cr6, **1.2307** 29CrMoV9 **1.2080** X210Cr12, **1.2083** X42Cr13, **1.2419** 105WCr6, **1.2767** X45NiCrMo4	≤850 >850-1000		◍ ●
High speed steels	**1.3243** S 6-5-2-5, **1.3343** S 6-5-2, **1.3344** S 6-5-3	≥650-1000		●
Spring steels	**1.5026** 55Si7, **1.7176** 55Cr3, **1.8159** 51CrV4 (51CrV4)		≤330 HB	●
Stainless steels, sulphured austenitic martensitic	**1.4005** X12CrS13, **1.4104** X14CrMoS17, **1.4105** X6CrMoS17, **1.4305** X8CrNiS18-9 **1.4301** X5CrNi18-10 (V2A), **1.4541** X6CrNiTi18-10, **1.4571** X6CrNiMoTi 17-12-2 (V4A) **1.4057** X20CrNi 17 2 (X17CrNi16-2), **1.4122** X39CrMo17-1, **1.4521** X2CrMoTi18-2	≤850 ≤850 ≤850		● ● ●
Hardened steels	–		≤40-48 HRC >48-60 HRC	● ●
Special alloys	Nimonic, Inconel, Monel, Hastelloy	≤1200		●
Cast iron	**0.6010** EN-GJL-100(GG10), **0.6020** EN-GJL-200(GG20) **0.6025** EN-GJL-250(GG25), **0.6035** EN-GJL-350(GG35)		≤240 HB <300 HB	◍○ ◍○
New cast materials CGI	**EN-GJV250 (GGV25)**, **EN-GJV350** (GGV35) **EN-GJV400** (GGV40), **EN-GJV500** (GGV50), SiMo 6		≤220 HB <300 HB	◍○ ◍○
New cast materials ADI	**EN-GJS-800-8** (ADI800), **EN-GJS-1000-5** (ADI1000) **EN-GJS-1200-2** (ADI1200), **EN-GJS-1400-1** (ADI1400)	800-1000 1200-1400		◍○ ◍○
Spheroidal graphite iron and malleable cast iron	**0.7050** EN-GJS-500-7(GGG50), **0.8035** EN-GJMW-350-4(GTW35) **0.7070** EN-GJS-700-2(GGG70), **0.8170** EN-GJMB-700-2(GTS70)		≤240 HB <300 HB	◍ ◍
Chilled cast iron	–		≤350 HB	◍
Ti and Ti-alloys	**3.7024** Ti99,5, **3.7114** TiAl5Sn2,5, **3.7124** TiCu2 **3.7154** TiAl6Zr5, **3.7165** TiAl6V4, **3.7184** TiAl4Mo4Sn2,5, - TiAl8Mo1V1	≤850 >850-1200		● ●
Aluminium and Al-alloys	**3.0255** Al99,5, **3.2315** AlMgSi1, **3.3515** AlMg1	≤400		◍
Al wrought alloys	**3.0615** AlMgSiPb, **3.1325** AlCuMg1, **3.3245** AlMg3Si, **3.4365** AlZnMgCu1,5	≤450		◍
Al cast alloys ≤ 10 % Si > 10 % Si	**3.2131** G-AlSi5Cu1, **3.2153** G-AlSi7Cu3, **3.2573** G-AlSi9 **3.2581** G-AlSi12, **3.2583** G-AlSi12Cu, - G-AlSi12CuNiMg	≤600 ≤600		◍ ◍
Magnesium alloys	**3.5200** MgMn2, **3.5812.05** G-MgAl8Zn1, **3.5612.05** G-MgAl6Zn1	≤450		○
Copper, low-alloyed	**2.0070** SE-Cu, **2.1020** CuSn6, **2.1096** G-CuSn5ZnPb	≤400		◍
Brass, short-chipping long-chipping	**2.0380** CuZn39Pb2, **2.0401** CuZn39Pb3, **2.0410** CuZn43Pb2 **2.0250** CuZn20, **2.0280** CuZn33, **2.0332** CuZn37Pb0,5	≤600 ≤600		◍ ◍
Bronze, short-chipping	**2.1090** CuSn7ZnPb, **2.1170** CuPb5Sn5, **2.1176** CuPb10Sn **2.0790** CuNi18Zn19Pb	≤600 >600-850		◍● ●
Bronze, long-chipping	**2.0916** CuAl5, **2.0960** CuAl9Mn, **2.1050** CuSn10 **2.0980** CuAl11Ni, **2.1247** CuBe2	≤850 >850-1000		● ●

Tool holders ≤ 10×D, Guhring no. 4110

Guhring no.	4112
Tool material	Solid carbide
Carbide grade	K/P
Surface finish	nanoFIRE
Application	steel

v_c m/min	Feed column no.
100	5
95	4
100	6
95	5
100	5
95	5
90	4
90	5
85	4
100	6
90	5
70	4
95	4
70	3
55	4
50	3
55	2
50	2
55	2
40	2
35	2
25	1
25	1
40	2
35	1

Guhring no.	4113
Tool material	Solid carbide
Carbide grade	K/P
Surface finish	FIRE
Application	cast iron

v_c m/min	Feed column no.
80	6
70	6
60	5
60	5
60	5
60	5
100	7
80	6
70	6

Guhring no.	4114
Tool material	Solid carbide
Carbide grade	K
Surface finish	bright
Application	Al and Al-alloys

v_c m/min	Feed column no.
150	6
150	6
130	6
105	6
150	6
70	5
150	6
110	5
70	5
50	5
45	5
35	4

12 tips to help diagnose problems

Problem	Cause	Remedy
1 Cutting edge build up 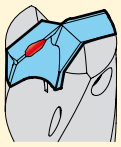	low cutting speed excessive honing of cutting lip bright finish cutting lip	increase cutting speed reduce cutting lip honing have tool coated
2 Crumbling of outer corners 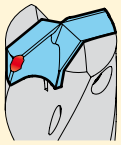	non rigid conditions, insufficient workpiece clamping deviation from concentricity too large interrupted cut	rigid clamping of workpiece check and correct concentricity if possible reduce feed
3 Heavy wear at flank 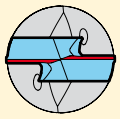	cutting speed too high feed too low clearance angle too small	reduce cutting speed increase feed increase clearance angle
4 Crumbling on cutting lips 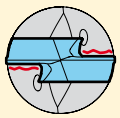	non rigid conditions, insufficient workpiece clamping interrupted cut max. wear values exceeded incorrect tool type	rigid clamping of workpiece reduce feed reduce tool change intervals apply suitable tool
5 Land wear 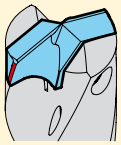	non rigid conditions, insufficient workpiece clamping deviation from concentricity too large back taper too small incorrect coolant (oil), coolant too weak	rigid clamping of workpiece check and correct concentricity if possible increase back taper increase strength of coolant or use neat oil
6 Scoring on tool body 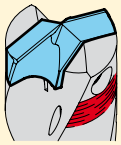	non rigid conditions, insufficient workpiece clamping deviation from concentricity too large interrupted cut abrasive workpiece material	rigid clamping of workpiece check and correct concentricity if possible reduce feed increase strength of coolant or use neat oil

12 tips to help diagnose problems

Problem	Cause	Remedy
7 Heavy chisel edge wear 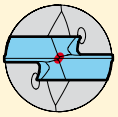	cutting speed too low feed too high excessive honing of cutting lip	increase cutting speed reduce feed reduce cutting lip honing
8 Crumbling at intersection, web thinning and cutting lip 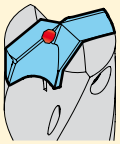	clearance angle too small excessive honing of cutting lip incorrect tool type	increase clearance angle reduce cutting lip honing apply suitable tool
9 Plastic deformation of outer corner 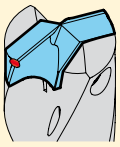	cutting speed too high insufficient coolant volume incorrect or no honing at corner	reduce cutting speed increase volume/pressure correct honing
10 Misalignment 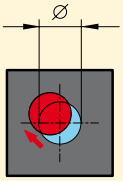	non rigid conditions, insufficient workpiece clamping deviation from concentricity too large spotting area transverse chisel edge too large	rigid clamping of workpiece check and correct concentricity if possible use milling cutter (2-fluted) for spotting reduce chisel edge
11 Heavy burring on break-through 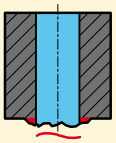	feed too high max. wear values exceeded excessive honing of cutting lip	reduce feed reduce tool change intervals reduce cutting lip honing
12 Unsatisfactory surface quality 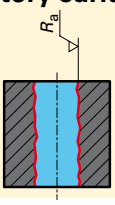	non rigid conditions, insufficient workpiece clamping deviation from concentricity too large insufficient coolant volume	rigid clamping of workpiece check and correct concentricity if possible increase volume/pressure

FIRE/nanoFIRE
Coating colour: violet
This TiAlN/TiN multilayer coating is applied to HSS and carbide drills. It offers outstanding wear resistance in drilling operations and high heat resistance. Besides conventional wet applications this coating is suitable for minimum lubrication and dry machining, often combined with MolyGlide to optimise the running-in wear and improved resistance to galling.

TiAlN SuperA/nanoA
Coating colour: grey-violet
The well established A-coating has been developed at Guhring. By optimising the structural, chemical and mechanical properties of the new Super-A coating an extremely high hot hardness, very good oxidation resistance and excellent coating adhesion have been achieved. This coating is used exclusively on carbide cutting tools and is ideally suited for difficult to machine aerospace materials such as titanium alloys, Inconel as well as machining hardened steel materials (>52 HRC) and HSC applications.

TiAlN
Coating colour: violet
The monolayer TiAlN coating is suited for abrasive operations with carbide tools because of its high hardness and chemical resistance, e.g. hard machining and high speed cutting (HSC).

TiCN
Coating colour: grey
End mills and taps exposed to high mechanical load are coated with TiCN. With respect to the high hardness and toughness of TiCN coating the tools offer good machining results operating with interrupted cutting.

TiN
Coating colour: yellow-golden
The monolayer titanium nitride coating is standard for HSS and carbide tools. Used for drilling, tapping and milling operations. Nevertheless, most applications is steel machining.

bright
Due to their basically good properties, high speed steel and carbide tools are supplied without being surface treated, i.e. in a bright finish. Guhring offers bright tools in its standard range only as basic tools for a cost-efficient coating to customer specific requirements.

HT 800 WP Special Tools Questionnaire

☐ **Order** ☐ **Enquiry**

Contact for queries

Name/customer no. if available — New customer

Order number

Street/house no.

Town/post code

Telephone

Fax

Date

Signature

Quantity ▶ holders inserts

Material to be machined ▶

Machining ▶

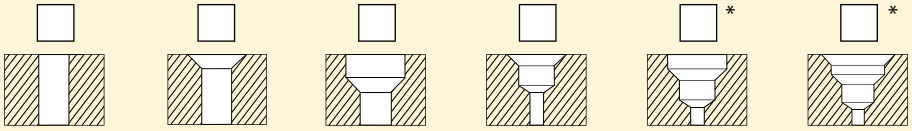

*please incl. separate drawing

Flute ▶ spiral partly spiral straight

Dimensions
For spiral-
& straight-fluted types ▶

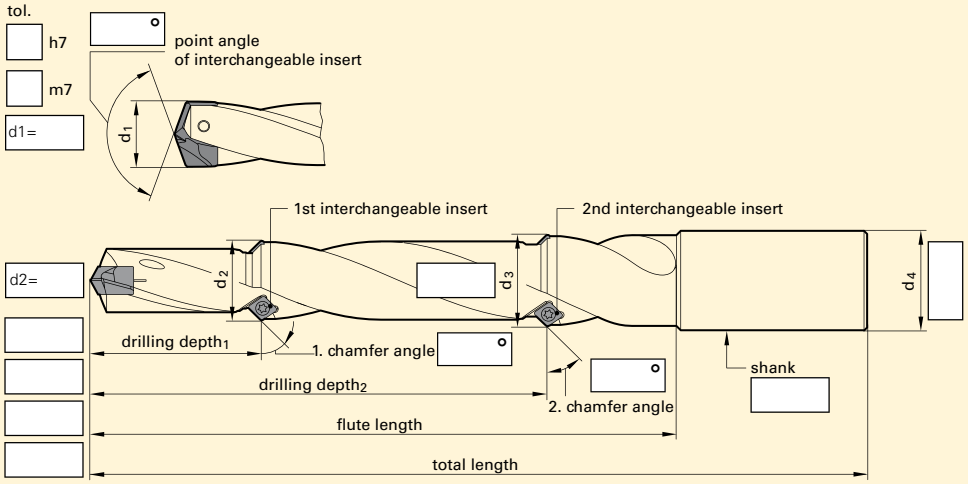

Shank form ▶ HA HE HSK, form size SK, size

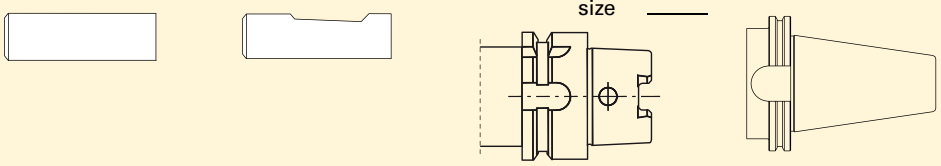

Internal cooling ▶ yes no

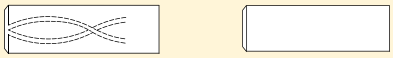

Interchangeable insert coating ▶ FIRE TiAlN SuperA TiAlN TiCN TiN bright

guhring@guhring-tools.ru
www.guhring-tools.ru