HT 800 WP Interchangeable Insert Holders 1 x D For Pilot Drilling and Countersinking

Order no. = Guhring no. + Code-no.

Guhring no.	4105
Discount group	140

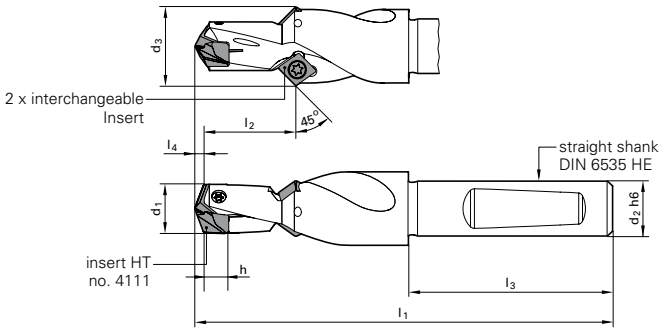

*l1 with pilot insert Guhring no. 4111only. With drilling insert Guhring no. 4112, 4113 or 4114, see h and l4 dimensions page 8 to 11!

Code no.	Holder size	d1 mm	d2h6 mm	d3 mm	incl. WP l1* mm	l2 max mm	l3 mm	Availability
11,000	110	11,00-11,99	12,00	17,00	81,00	14,80	45,00	●
11,005	110	11,00-11,99	12,70	17,00	81,00	14,80	45,00	●
12,000	120	12,00-12,99	12,00	18,00	84,00	15,80	45,00	●
12,005	120	12,00-12,99	12,70	18,00	84,00	15,80	45,00	●
13,000	130	13,00-13,99	14,00	18,00	86,00	16,30	45,00	●
13,005	130	13,00-13,99	15,875	18,00	86,00	16,30	45,00	●
14,000	140	14,00-15,99	14,00	18,00	93,00	17,40	48,00	●
14,005	140	14,00-15,99	15,875	18,00	93,00	17,40	48,00	●
16,000	160	16,00-17,99	16,00	20,00	99,00	19,40	48,00	●
16,005	160	16,00-17,99	15,875	20,00	99,00	19,40	48,00	●
18,000	180	18,00-19,99	18,00	22,00	106,00	21,40	50,00	●
18,005	180	18,00-19,99	19,05	22,00	106,00	21,40	50,00	●
20,000	200	20,00-21,99	25,00	24,00	117,00	23,40	56,00	●
20,005	200	20,00-21,99	25,40	24,00	117,00	23,40	56,00	●
22,000	220	22,00-23,99	25,00	26,00	122,00	25,40	56,00	●
22,005	220	22,00-23,99	25,40	26,00	122,00	25,40	56,00	●
24,000	240	24,00-25,99	25,00	28,00	128,00	27,40	56,00	●
24,005	240	24,00-25,99	25,40	28,00	128,00	27,40	56,00	●

Holders are always supplied with clamping screw, Guhring no. 4071, and clamping key, Guhring no. 1612.