HT 800 WP Interchangeable Insert Holders 7 x D

Order no. = Guhring no. + Code-no.

Guhring no.	4109
Discount group	140

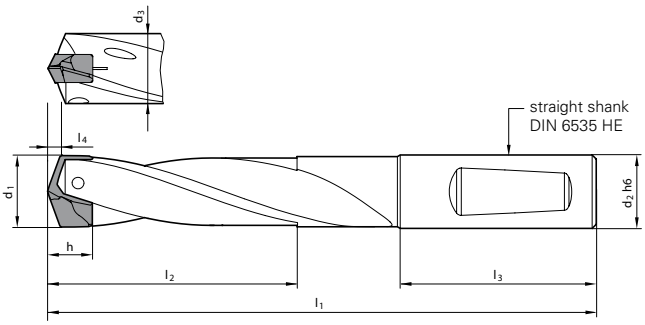

*l1 with drilling insert Guhring no. 4112, 4113 or 4114 only. With pilot insert Guhring no. 4111, see h and l4 dimensions page 8 to 11!

Code no.	Holder size	d1 mm	d2h6 mm	d3 mm	incl. WP l1* mm	l2 max mm	l3 mm	Availability
11,000	110	11.00 - 11.49	12.00	10.70	147.00	82.60	45.00	●
11,005	110	11.00 - 11.49	12.70	10.70	147.00	82.60	45.00	●
11,500	115	11.50 - 11.99	12.00	11.20	151.00	86.10	45.00	●
11,505	115	11.50 - 11.99	12.70	11.20	151.00	86.10	45.00	●
12,000	120	12.00 - 12.49	12.00	11.70	156.00	89.70	45.00	●
12,005	120	12.00 - 12.49	12.70	11.70	156.00	89.70	45.00	●
12,500	125	12.50 - 12.99	14.00	12.20	160.00	93.30	45.00	●
12,505	125	12.50 - 12.99	15.875	12.20	160.00	93.30	45.00	●
13,000	130	13.00 - 13.49	14.00	12.70	164.00	96.90	45.00	●
13,005	130	13.00 - 13.49	15.875	12.70	164.00	96.90	45.00	●
13,500	135	13.50 - 13.99	14.00	13.20	169.00	100.60	45.00	●
13,505	135	13.50 - 13.99	15.875	13.20	169.00	100.60	45.00	●
14,000	140	14.00 - 14.49	14.00	13.70	173.00	104.20	45.00	●
14,005	140	14.00 - 14.49	15.875	13.70	173.00	104.20	45.00	●
14,500	145	14.50 - 14.99	16.00	14.20	180.00	107.80	48.00	●
14,505	145	14.50 - 14.99	15.875	14.20	180.00	107.80	48.00	●
15,000	150	15.00 - 15.49	16.00	14.70	185.00	111.30	48.00	●
15,005	150	15.00 - 15.49	15.875	14.70	185.00	111.30	48.00	●
15,500	155	15.50 - 15.99	16.00	15.20	189.00	114.90	48.00	●
15,505	155	15.50 - 15.99	15.875	15.20	189.00	114.90	48.00	●
16,000	160	16.00 - 16.49	16.00	15.70	193.00	118.90	48.00	●
16,005	160	16.00 - 16.49	15.875	15.70	193.00	118.90	48.00	●
16,500	165	16.50 - 16.99	18.00	16.20	198.00	122.10	48.00	●
16,505	165	16.50 - 16.99	19.05	16.20	198.00	122.10	48.00	●
17,000	170	17.00 - 17.49	18.00	16.70	202.00	125.80	48.00	●
17,005	170	17.00 - 17.49	19.05	16.70	202.00	125.80	48.00	●
17,500	175	17.50 - 17.99	18.00	17.20	206.00	129.40	48.00	●
17,505	175	17.50 - 17.99	19.05	17.20	206.00	129.40	48.00	●
18,000	180	18.00 - 18.49	18.00	17.70	211.00	132.90	48.00	●
18,005	180	18.00 - 18.49	19.05	17.70	211.00	132.90	48.00	●
18,500	185	18.50 - 18.99	20.00	18.20	217.00	136.50	50.00	●
18,505	185	18.50 - 18.99	19.05	18.20	217.00	136.50	50.00	●
19,000	190	19.00 - 19.49	20.00	18.70	221.00	140.10	50.00	●
19,005	190	19.00 - 19.49	19.05	18.70	221.00	140.10	50.00	●
19,500	195	19.50 - 19.99	20.00	19.20	226.00	143.70	50.00	●
19,505	195	19.50 - 19.99	19.05	19.20	226.00	143.70	50.00	●
20,000	200	20.00 - 20.49	20.00	19.70	230.00	147.30	50.00	●
20,005	200	20.00 - 20.49	19.05	19.70	230.00	147.30	50.00	●
20,500	205	20.50 - 20.99	25.00	20.20	243.00	151.00	56.00	●
20,505	205	20.50 - 20.99	25.40	20.20	243.00	151.00	56.00	●
21,000	210	21.00 - 21.49	25.00	20.70	247.00	154.60	56.00	●
21,005	210	21.00 - 21.49	25.40	20.70	247.00	154.60	56.00	●

Holders are always supplied with clamping screw, Guhring no. 4071, and clamping key, Guhring no. 1612

guhring@guhring-tools.ru
www.guhring-tools.ru