HT 800 WP Interchangeable Insert holders 7 x D

Order no. = Guhring no. + Code-no.

Guhring no.	**4109**
Discount group	**140**

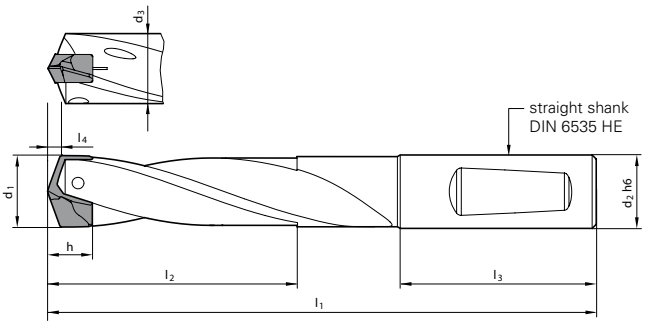

*l1 with drilling insert Guhring no. 4112, 4113 or 4114 only. With pilot insert Guhring no. 4111, see h and l4 dimensions page 8 to 11!

Code no.	Holder size	d1 mm	d2h6 mm	d3 mm	incl. WP l1* mm	l2 max mm	l3 mm	Availability
21,500	215	21.50 - 21.99	25.00	21.20	251.00	158.10	56.00	●
21,505	215	21.50 - 21.99	25.40	21.20	251.00	158.10	56.00	●
22,000	220	22.00 - 22.49	25.00	21.70	255.00	161.70	56.00	●
22,005	220	22.00 - 22.49	25.40	21.70	255.00	161.70	56.00	●
22,500	225	22.50 - 22.99	25.00	22.20	260.00	165.30	56.00	●
22,505	225	22.50 - 22.99	25.40	22.20	260.00	165.30	56.00	●
23,000	230	23.00 - 23.49	25.00	22.70	264.00	168.90	56.00	●
23,005	230	23.00 - 23.49	25.40	22.70	264.00	168.90	56.00	●
23,500	235	23.50 - 23.99	25.00	23.20	269.00	172.50	56.00	●
23,505	235	23.50 - 23.99	25.40	23.20	269.00	172.50	56.00	●
24,000	240	24.00 - 24.49	25.00	23.70	273.00	176.10	56.00	●
24,005	240	24.00 - 24.49	25.40	23.70	273.00	176.10	56.00	●
24,500	245	24.50 - 24.99	25.00	24.20	277.00	179.70	56.00	●
24,505	245	24.50 - 24.99	25.40	24.20	277.00	179.70	56.00	●
25,000	250	25.00 - 25.49	25.00	24.70	282.00	183.30	56.00	●
25,005	250	25.00 - 25.49	25.40	24.70	282.00	183.30	56.00	●
25,500	255	25.50 - 25.99	32.00	25.20	291.00	186.90	60.00	●
25,505	255	25.50 - 25.99	31.75	25.20	291.00	186.90	60.00	●

Holders are always supplied with clamping screw, Guhring no. 4071, and clamping key, Guhring no. 1612.